Assembly Instructions

Raku Series

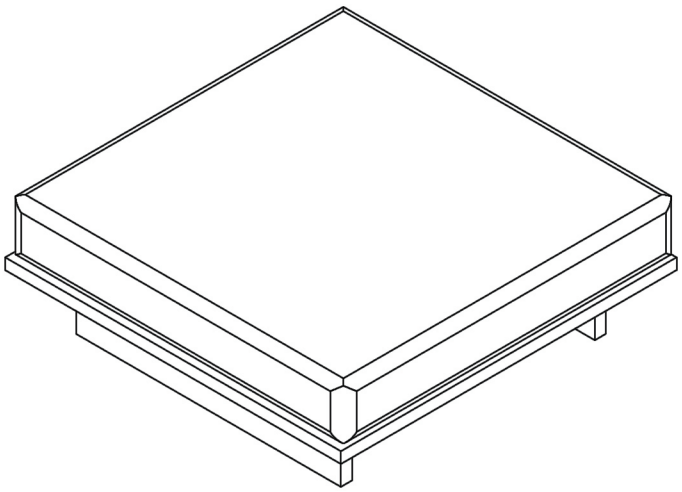

Lifely

Product Code
Raku Sofa Ottoman-IVORY

Dimensions(W x D x H)
760x760x320mm

Important

Please read through instruction carefully
Before assembly and keep for future reference.

For our full catalogue of assembly instructions,
Visit: lifely.com.au/assembly.

Important Tips and Maintenance

1.
Keep children and animals away from working area as smaller parts may cause choking if swallowed.

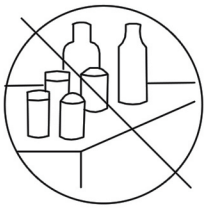

2.
Never place liquids or anything damp upon furniture as it will mark. Ensure a coaster or running is beneath.

3.
Never use ammonia based cleaning products as it will damage the finish.

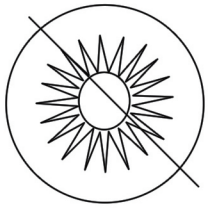

4.
To avoid fading, keep furniture out of direct sunlight.

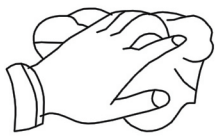

5.
Use a soft or damp cloth(dry cloth)when wiping or cleaning surfaces.

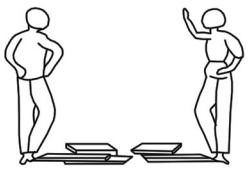

6.
Two person are required.

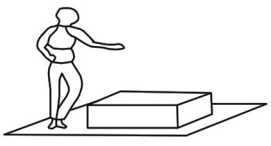

7.
Lay a soft matt down to protect the furniture piece before and during assembly.

So your relationship is strong.But is it flat-pack furniture strong?Unless you're an aerospace engineer,assembling furniture can be slightly stressful.We recommend meditating quietly,pouring yourelf a herbal tea (or slightly less herbal wine) and tackling things one step at a time.If you feel a passive aggressive remark coming on,try a compliment instead .E.g."You're so good looking".

This 6-Step assembly should take around 15 minutes with an Allen Key-or 10 minutes with an electric drill. Godspeed.

Designed for everyday

Component Hardware

Please check you have all the fittings
part or tools are listed in below.

No. A
Quantity:6Pcs
Cam Bolt

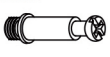

No. B
Quantity:6Pc
Cam Nut

No. C
Quantity:2Pcs
Screw Ø8*80mm

No. D
Quantity:1Pc
Wrench

No. E
Quantity:1Pc
Allen Key

No. F
Quantity:2Pcs
Nut

No. G
Quantity:2Pcs
Half-moon part

Component Panels & part List

Please check you have all the panels are listed below.

1. Seat panel ---------- x1 Carton 1/1
2. Leg ---------- x2 Carton 1/1
3. Connect panel ---------- x1 Carton 1/1
4. Seat cushion ---------- x1 Carton 1/1

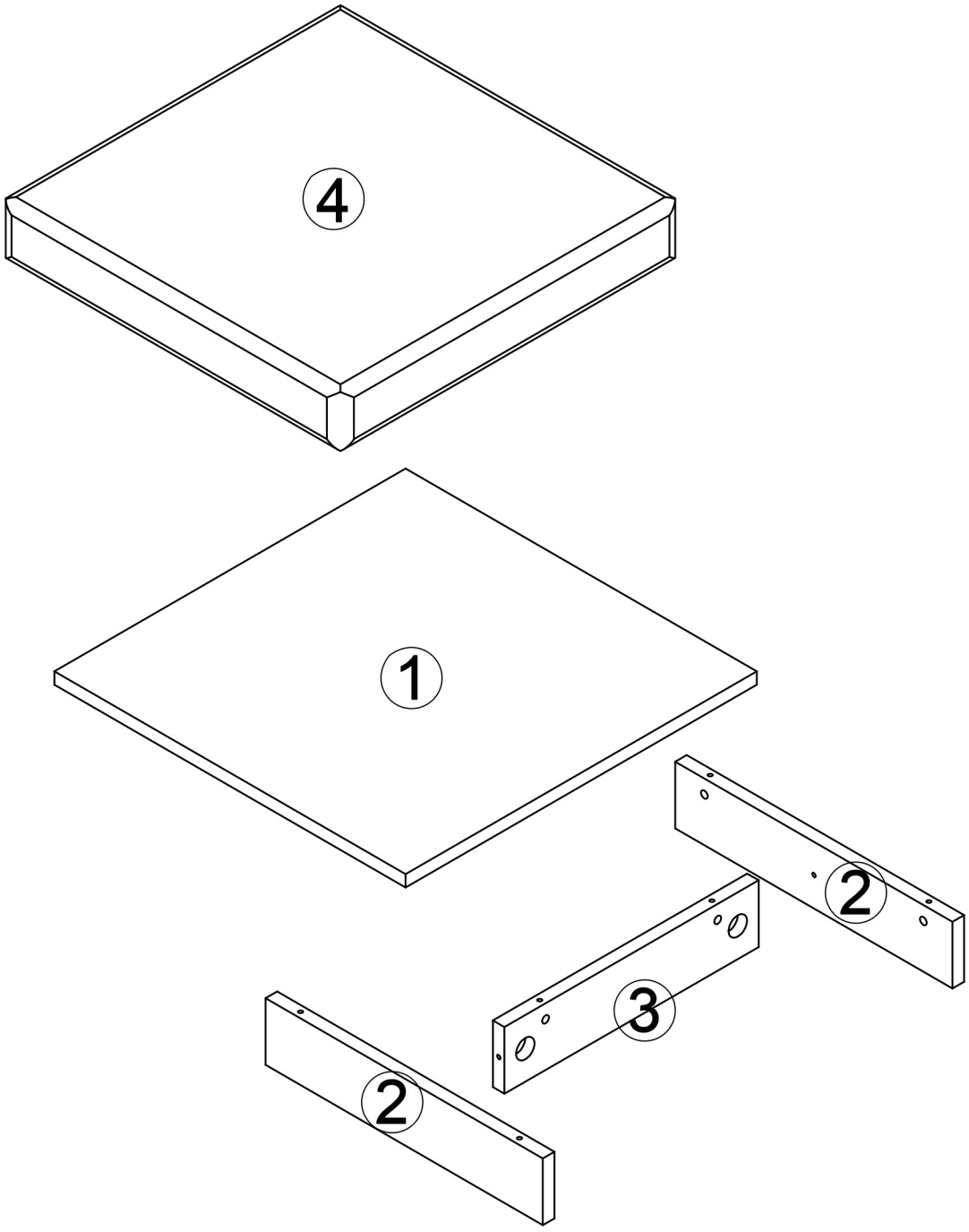

STEP 1

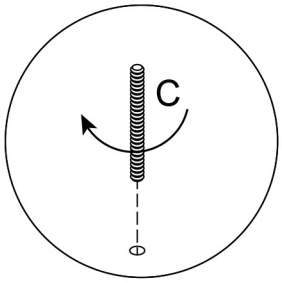

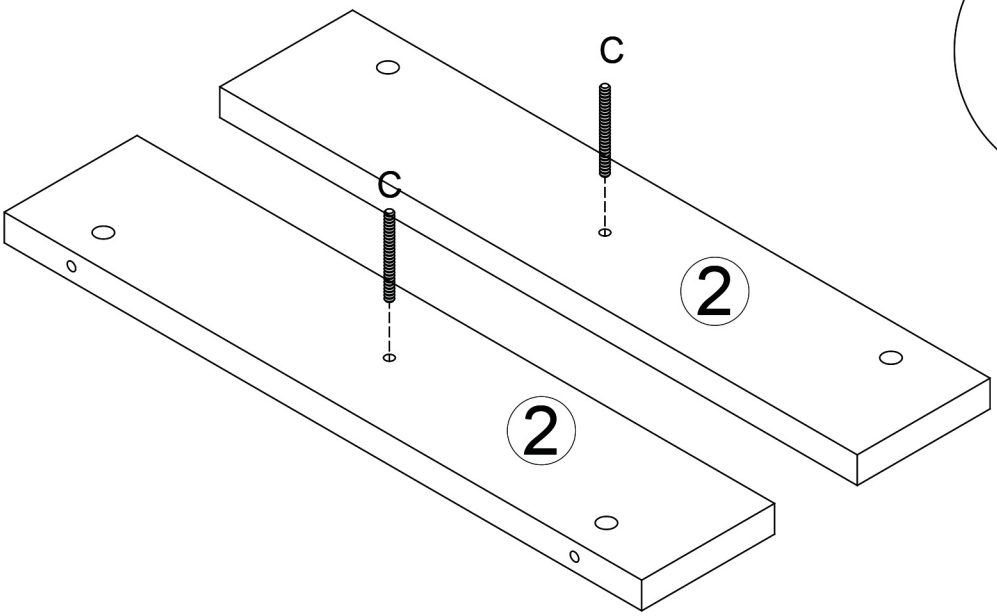

No. C
Quantity:2Pcs
Screw Ø8*80mm

STEP 2

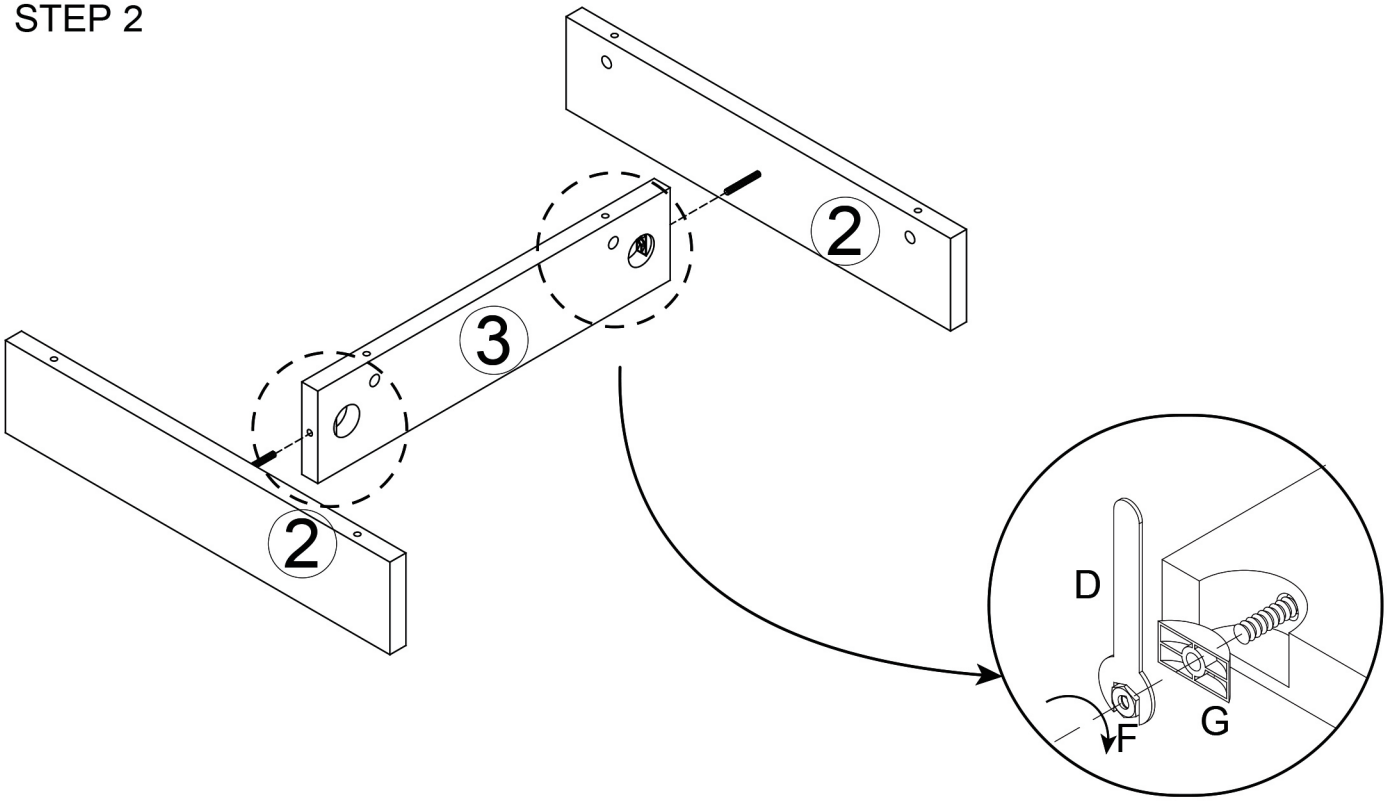

No. F
Quantity:2Pcs
Nut

No. G
Quantity:2Pcs
Half-moon part

No. D
Quantity:1Pc
Wrench

STEP 3

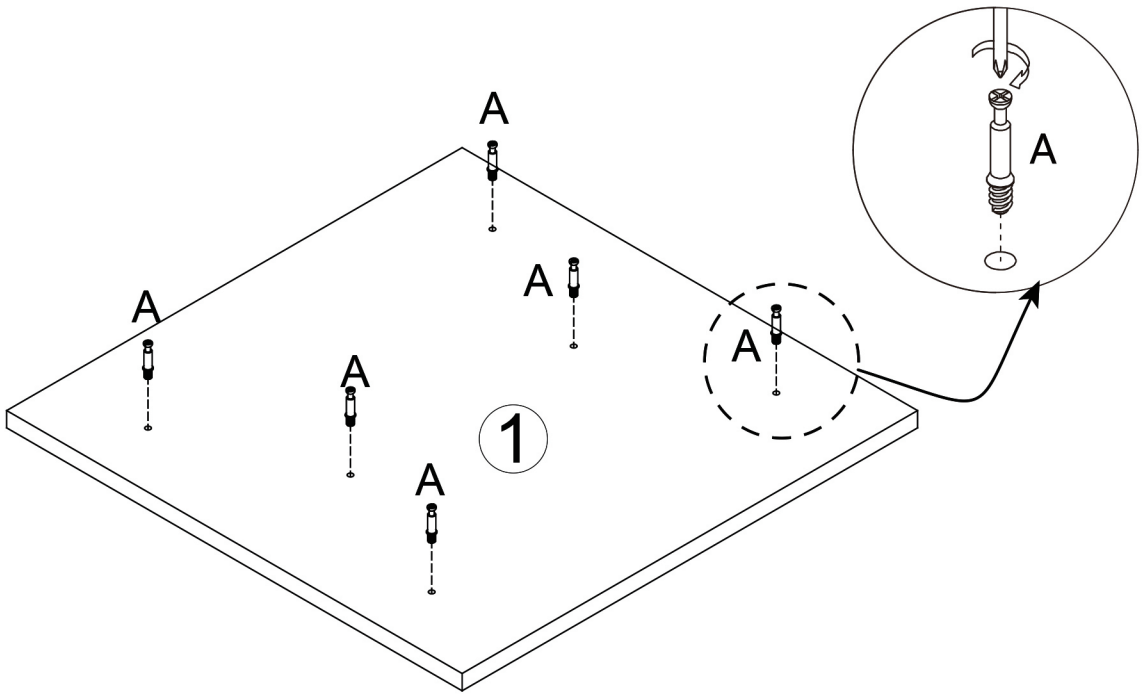

No. A
Quantity:6Pcs
Cam Bolt

STEP 4

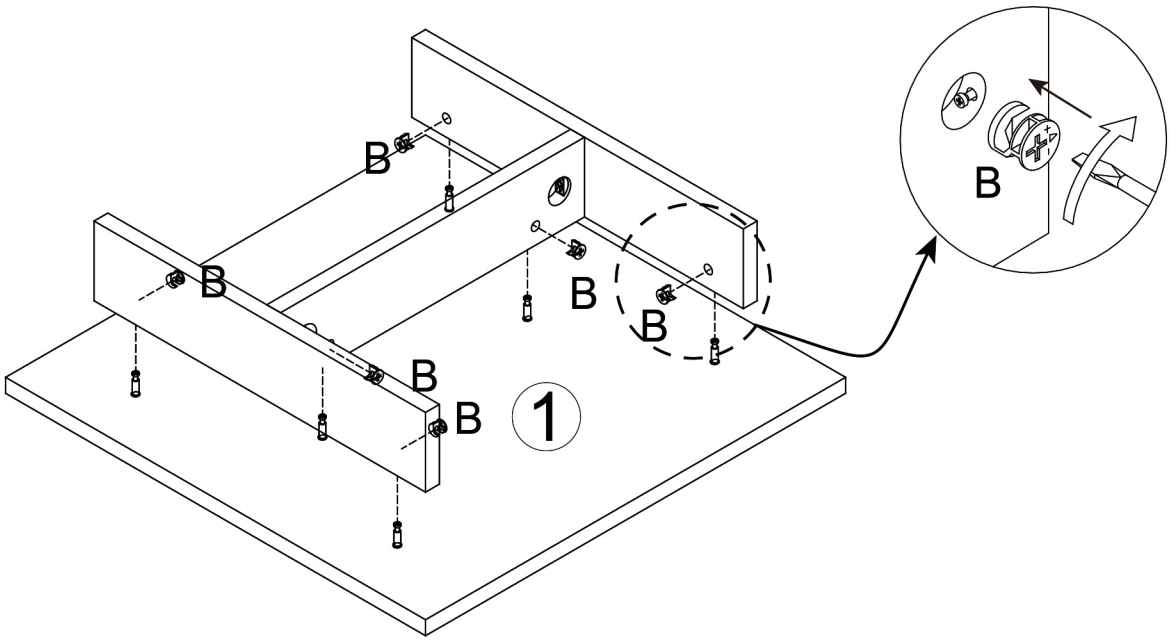

No. B
Quantity:6Pcs
Cam Nut

STEP 5

Put the seat cushion on the ottoman body.

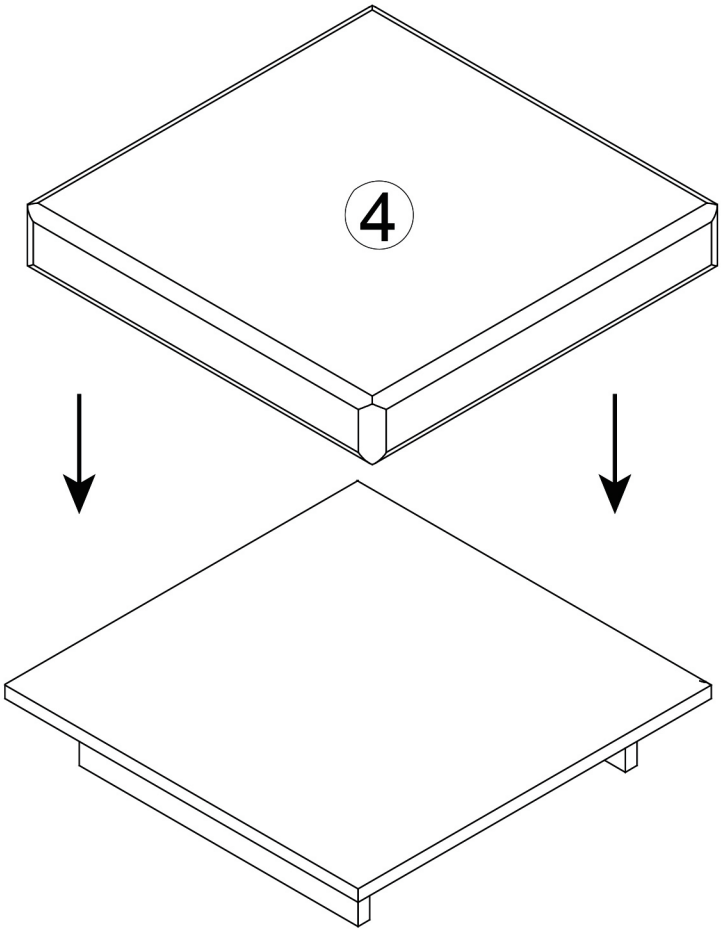

STEP 6

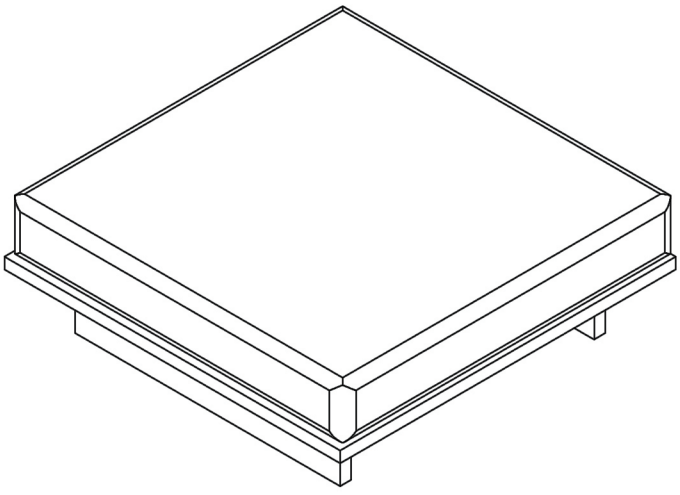

Great job. You're done!

Don't forget to share how it looks in
your space and tag us on Instagram.
@lifelyhome#homewithlifely!