Assembly Instructions

Bruny Series

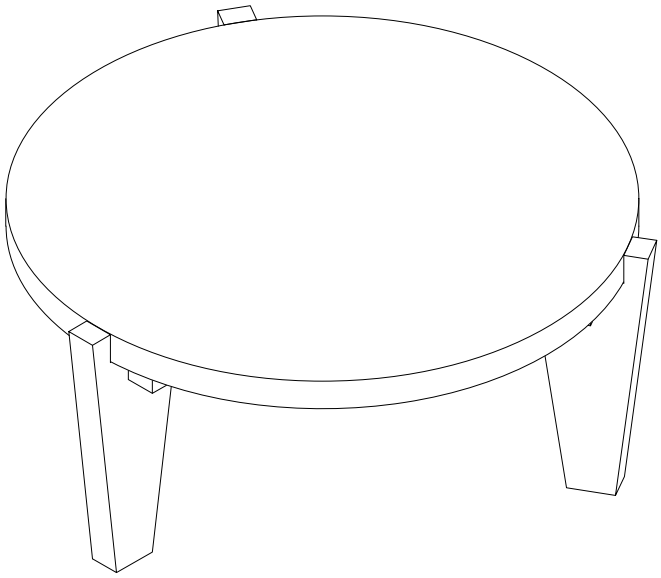

Eliving

Product Code

BRN-CT-OAK Coffee Table

Dimensions(W x D x H)

780x780x350mm

Important

Please read through instruction carefully
Before assembly and keep for future reference.

For our full catalogue of assembly instructions,
Visit: eliving.com.au/assembly.

Important Tips and Maintenance

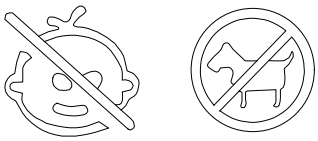

1.
Keep children and animals away from working area as smaller parts may cause choking if swallowed.

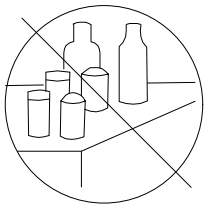

2.
Never place liquids or anything damp upon furniture as it will mark. Ensure a coaster or running is beneath.

3.
Never use ammonia based cleaning products as it will damage the finish.

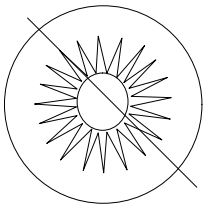

4.
To avoid fading, keep furniture out of direct sunlight.

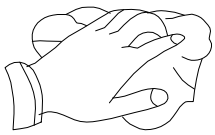

5.
Use a soft or damp cloth(dry cloth)when wiping or cleaning surfaces.

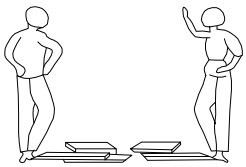

6.
Two person are required.

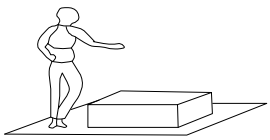

7.
Lay a soft matt down to protect the furniture piece before and during assembly.

So your relationship is strong.But is it flat-pack furniture strong? Unless you're an aerospace engineer,assembling furniture can be slightly stressful.We recommend meditating quietly,pouring yourself a herbal tea (or slightly less herbal wine) and tackling things one step at a time.If you feel a passive aggressive remark coming on,try a compliment instead.E.g. “You’re so good looking”

This 4-step assembly should take around 45 minutes with an Allen Key - or 30 minutes with and electric drill. Godspeed.

Designed for everyday

Component Hardware

Please check you have all the fittings part or tools are listed in below.

No. A
Quantity:6Pcs
Screw
M6*50mm

No. B
Quantity:1Pc
Allen Key
4#

No. C
Quantity:3Pcs
Foot Pad
φ20

No. D
Quantity:12Pcs
Screw
4*16

No. E
Quantity:6Pcs
L Shape Part

No. F
Quantity:12Pcs
Screw
4*45mm

Component Panels & part List

Please check you have all the panels are listed below.

1. Table Top x1
2. Table Leg x3
3. Table Leg Connector x3

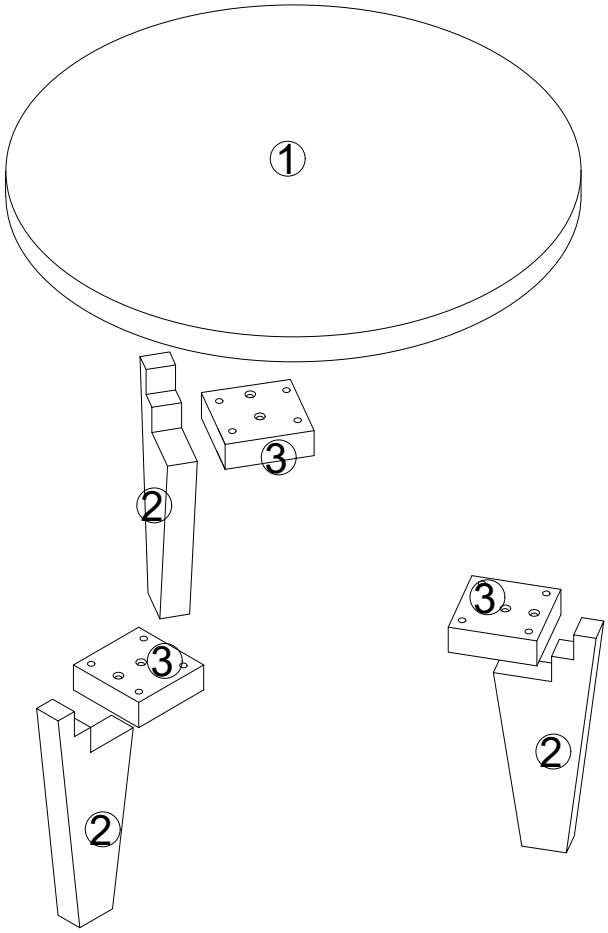

STEP 1

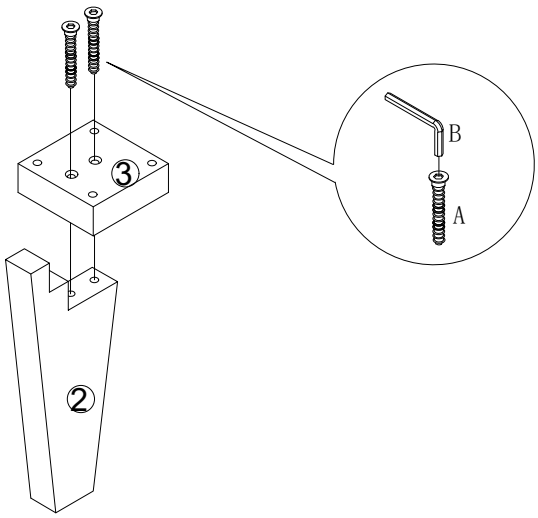

No. A	No. B
Quantity:6 Pcs	Quantity:1 Pc
Screw M6*50mm	Allen Key 4#

STEP 2

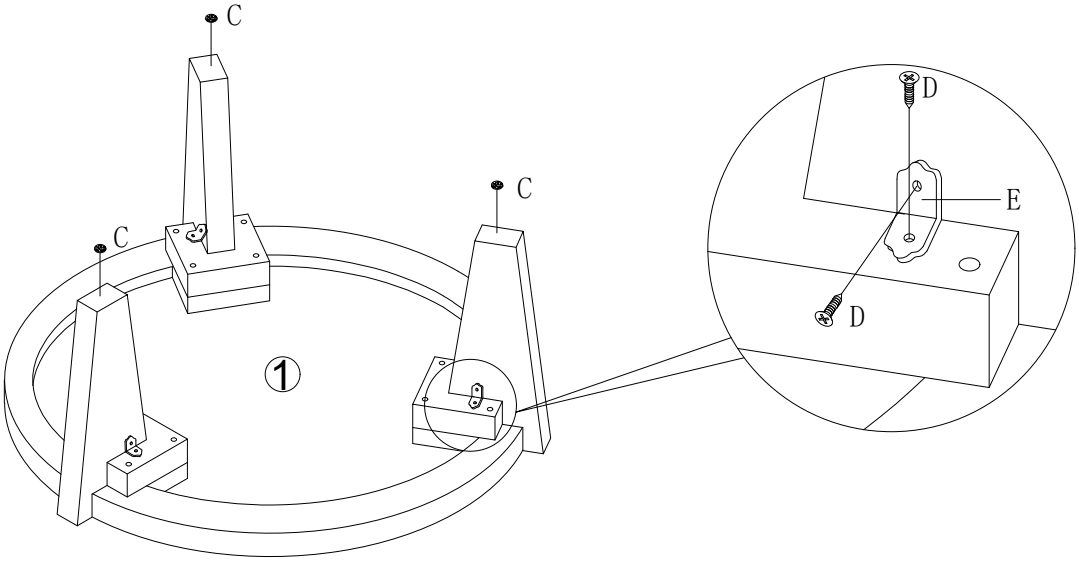

No. C	No. D	No. E
Quantity:3 Pcs	Quantity:12 Pcs	Quantity:6 Pcs
Foot Pad 8*80mm	Screw 4*16	L Shape Part

STEP 3

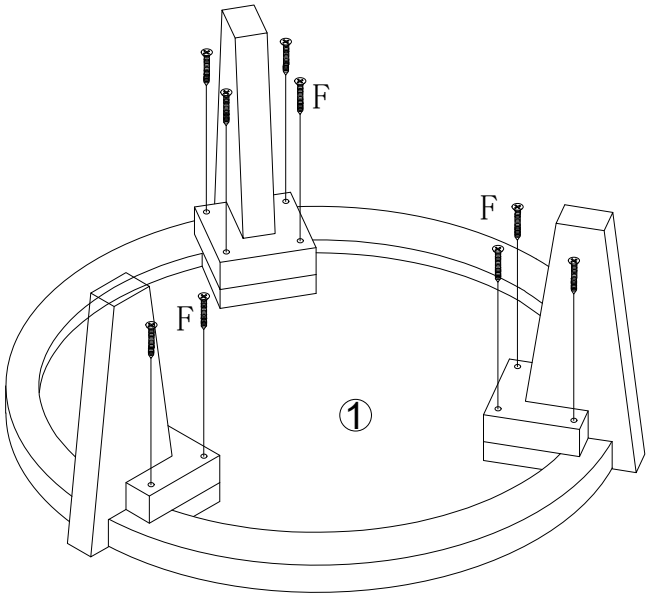

No. F

Quantity:12Pcs

Screw
4*45mm

STEP 4

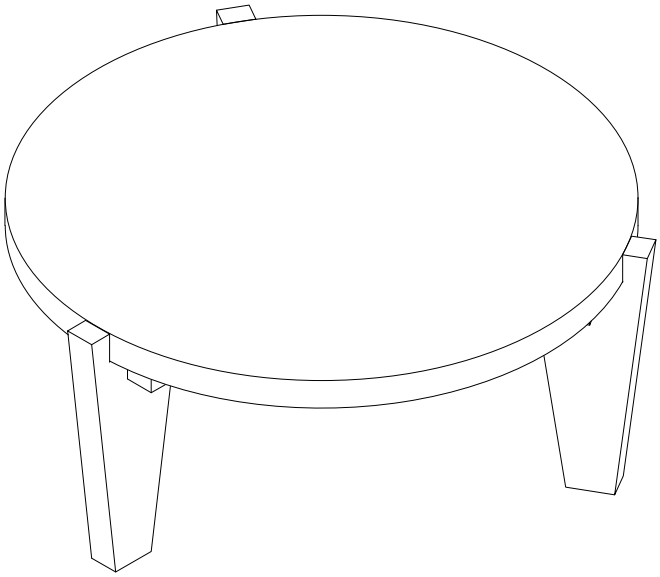

Great job. You're done!

Don't forget to share how it looks in your space and tag us on Instagram.