*Please Keep For Future Reference Only.

KONA SERIES
ASSEMBLY INSTRUCTION

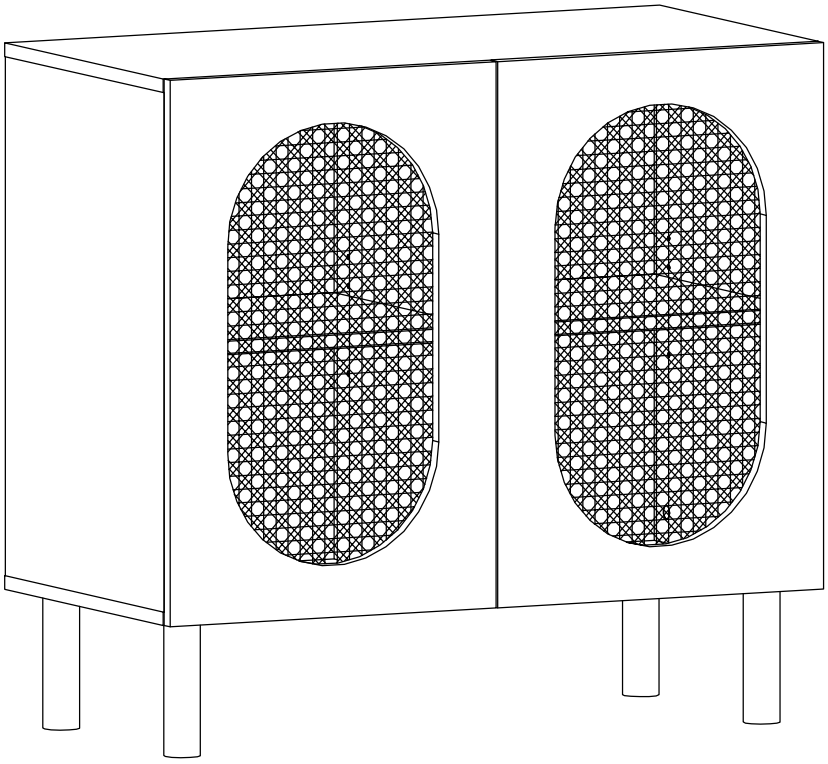

Kona Cabinet 2 Door-Maple
Kona Cabinet 2 Door-White

Dimensions:W800xD400xH750MM

IMPORTANT:-
PLEASE READ THESE INSTRUCTION CAREFULLY BEFORE STARTING ASSEMBLY.

IMPORTANT TIPS AND MAINTENANCE

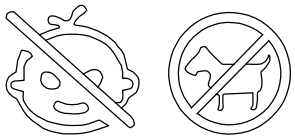

i)Keep children and animal away to avoid choking hazard.

ii)Never put the liquid on the furniture.

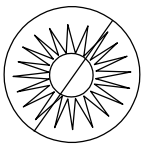

iii)To avoid dulling,do not place directly to the sunlight.

iv)Never use ammonia cleaning product,because it will damage the finish.

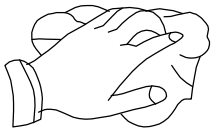

v)Use a dry cloth to wipe clean the surface.

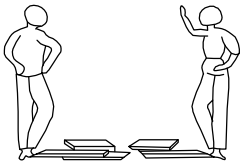

vi)Two person required.

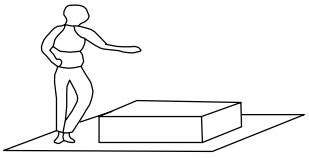

vii)Put a soft mat on the floor to protect the furniture before assembly.

COMPONENTS:- HARDWARE	Please check you have all the fittings part or tools are listed in below.

NO.	FITTINGS/TOOLS	QTY	NO.	FITTINGS/TOOLS	QTY
A.	DOWEL 8x40MM	12 Pcs	F.	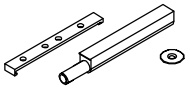	2 Sets
B.	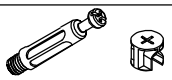 CAMBOLT+CAMNUT	12 Sets	G.	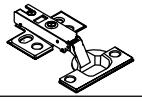	4 Pcs
C.	SCREW M3.5x14MM	58 Pcs	H.		12 Pcs
D.	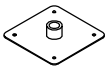	4 Pcs	J.		8 Pcs
E.	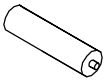	4 Pcs	K.		32 Pcs
			I.		12 Pcs

COMPONENTS:- PANELS	Please check you have all the panels are listed below.

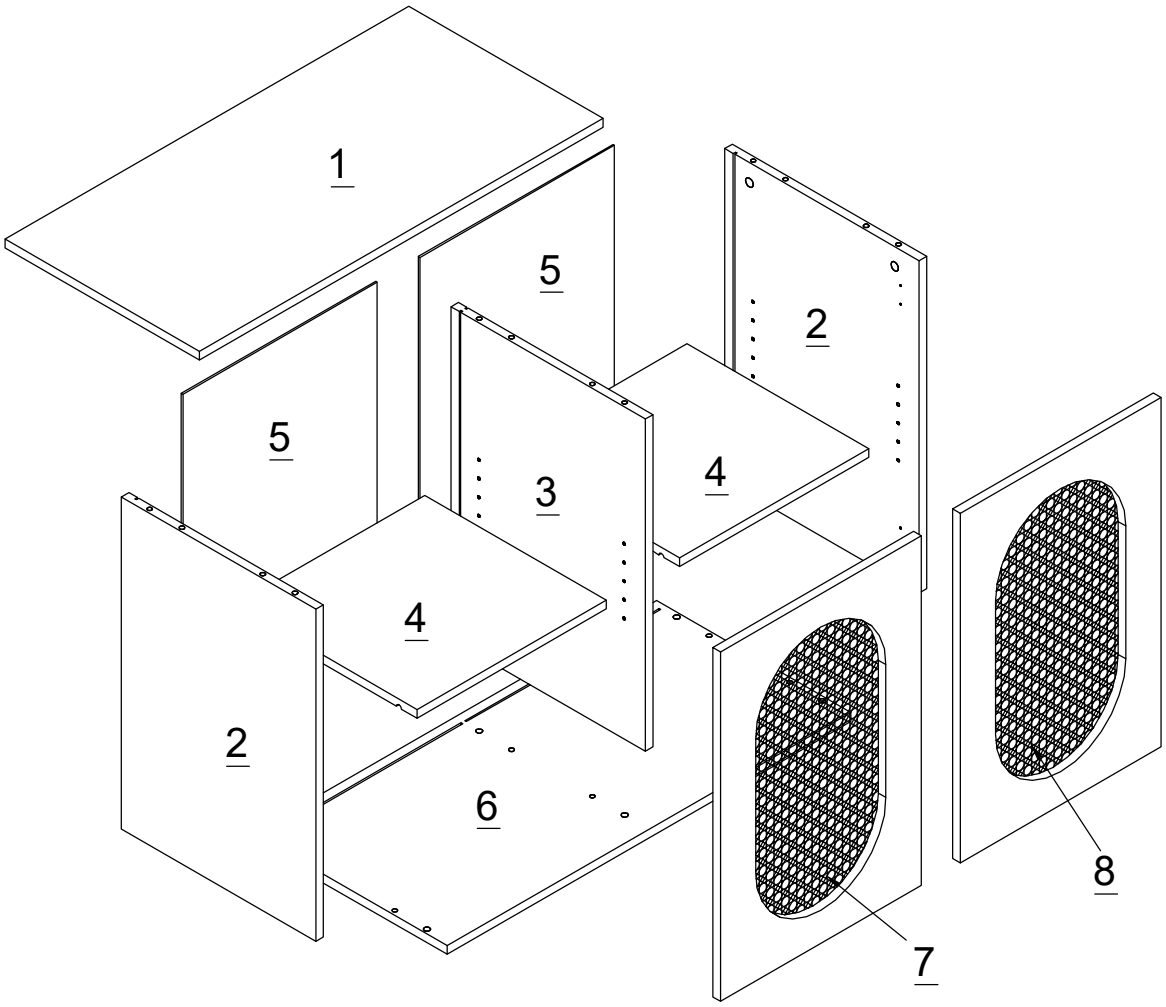

PARTLIST

1	TOP PANEL	1pc	5	BACK PANEL	2pcs
2	SIDE PANEL	2pcs	6	BOTTOM PANEL	1pc
3	SIDE PANEL -MIDDLE	1pc	7	DOOR-LEFT	1pc
4	MOVABLE SHELF	2pcs	8	DOOR-RIGHT	1pc

STEP1

HARDWARE NEEDED:		
A.		12Pcs

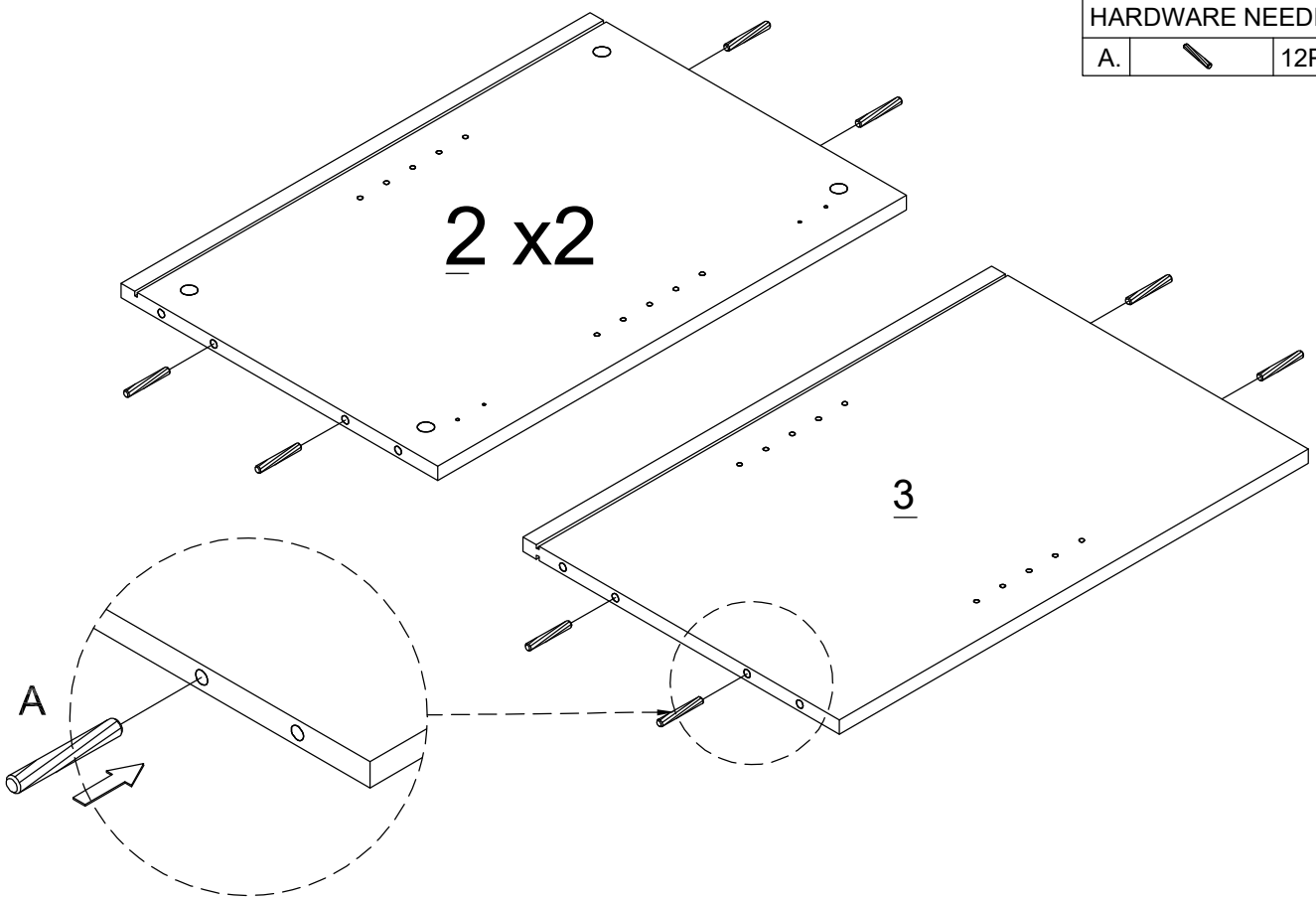

STEP2

HARDWARE NEEDED:		
B.		6Pcs
C.		4Pcs
F1.		2Pcs
F2.		2Pcs

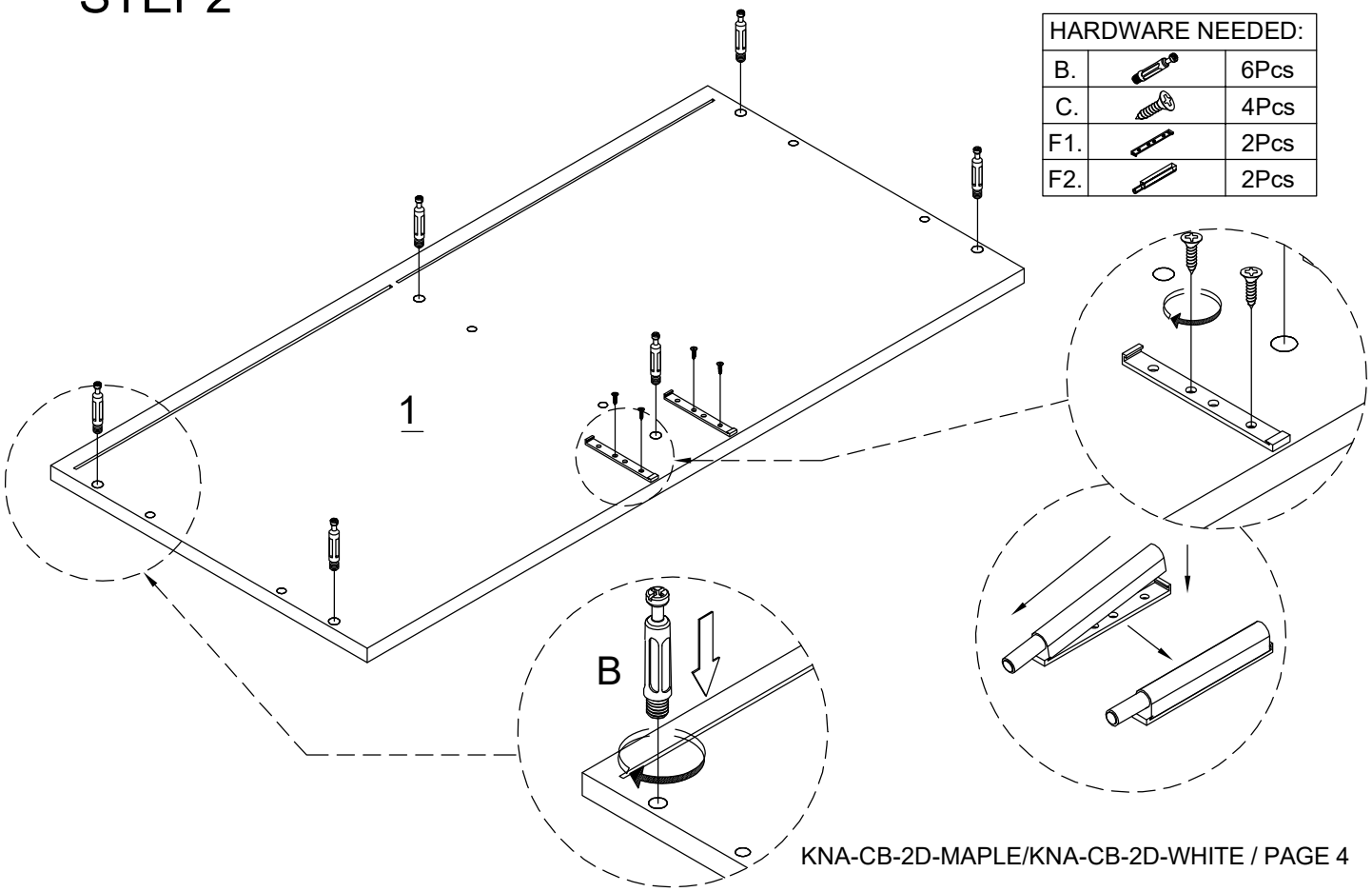

STEP3

HARDWARE NEEDED:		
C.		16Pcs
D.		4Pcs
E.		4Pcs

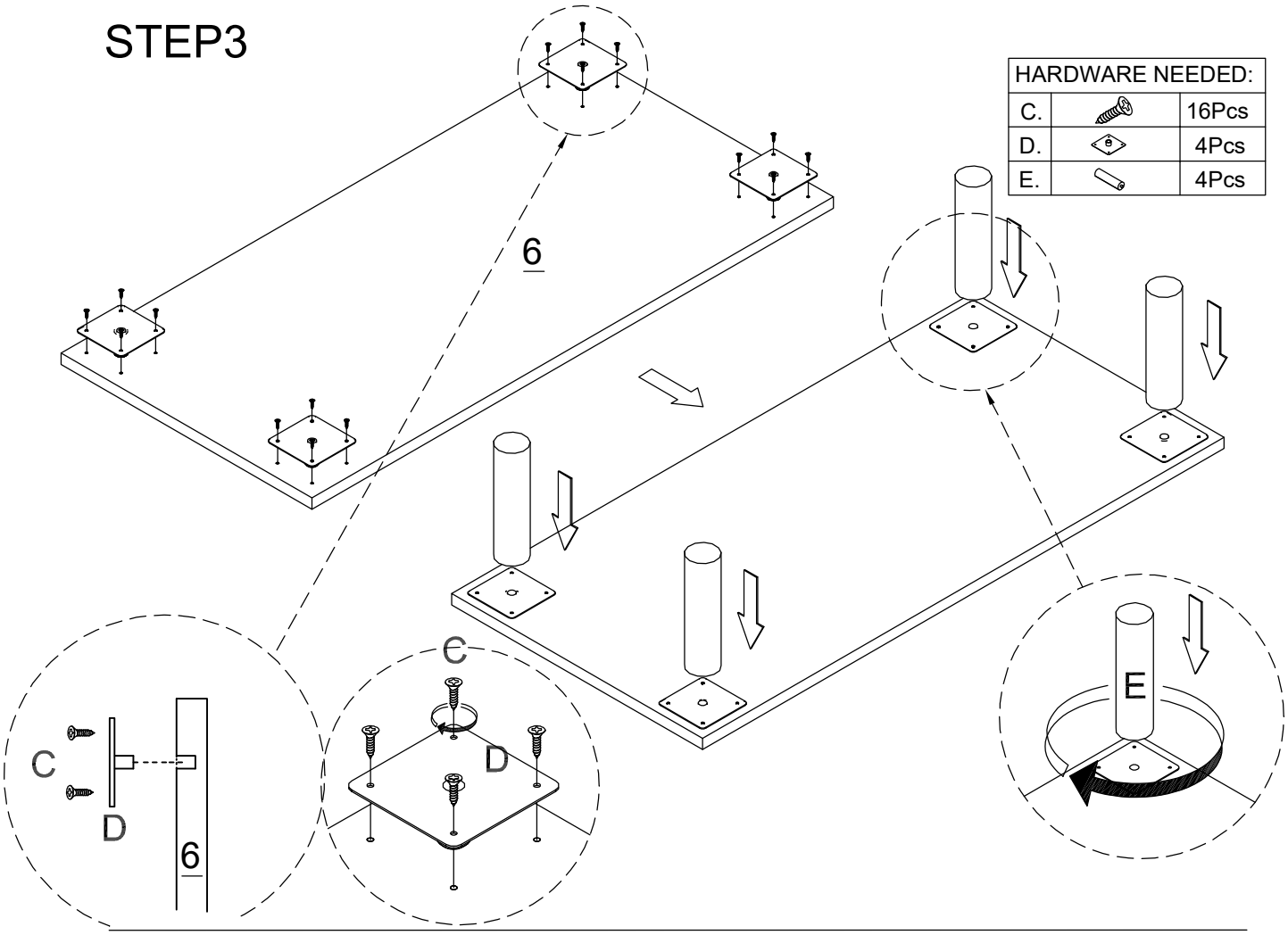

STEP4

HARDWARE NEEDED:		
B.		6Pcs

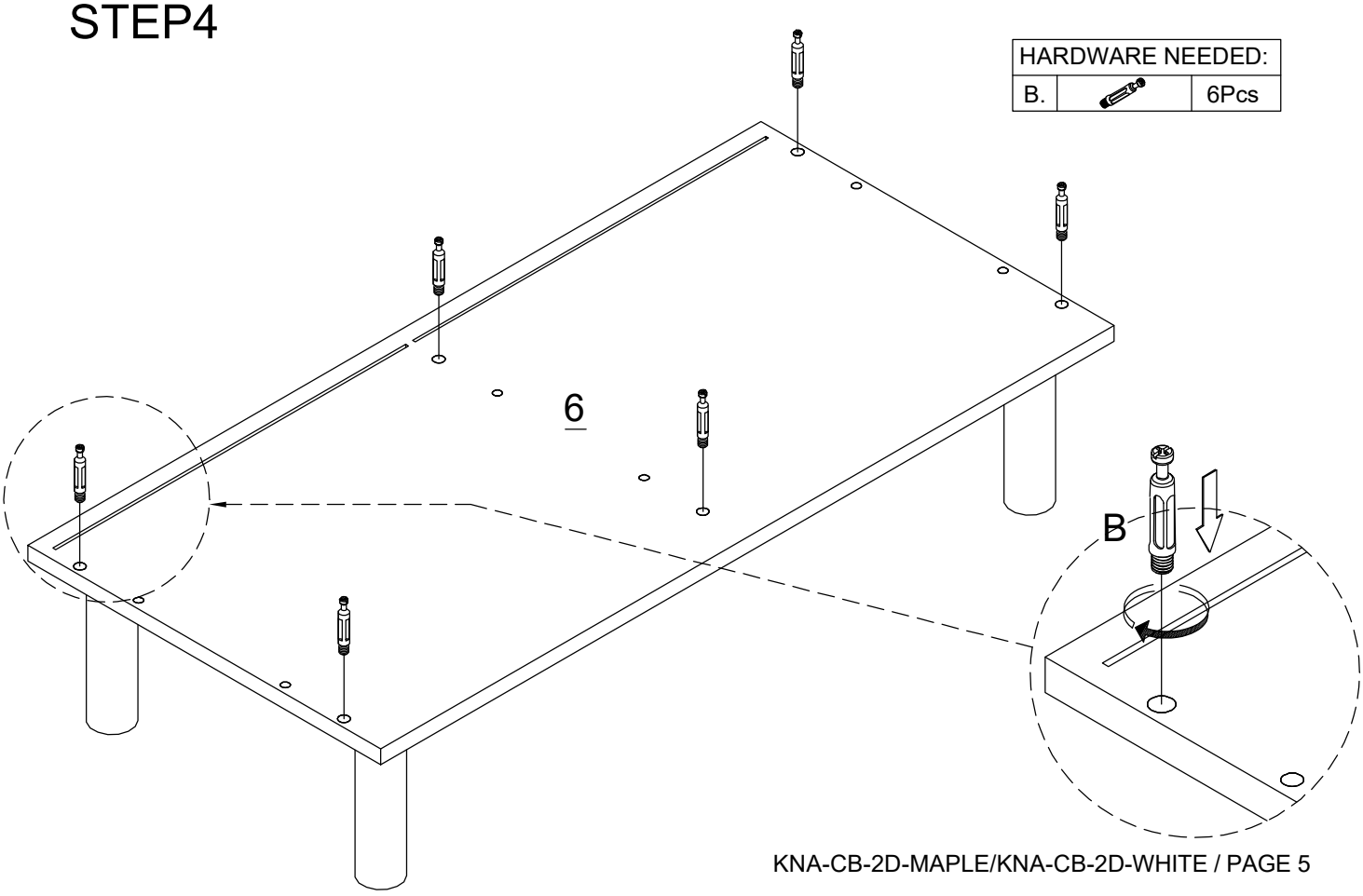

STEP5

HARDWARE NEEDED:		
B.		6Pcs

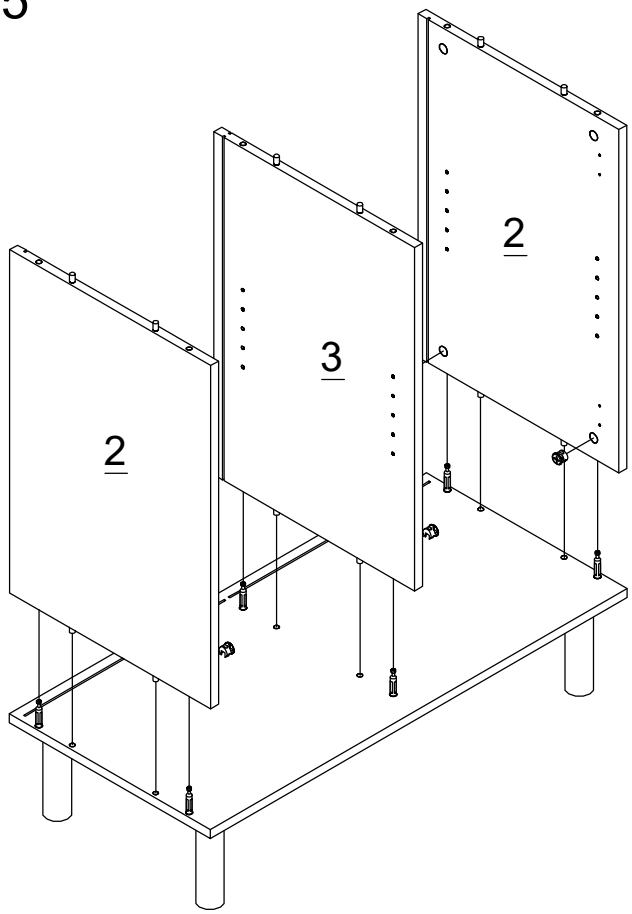

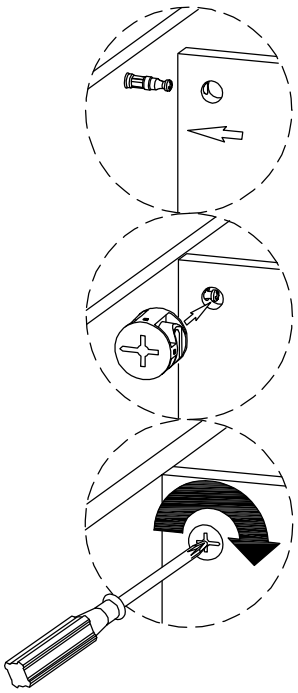

STEP6

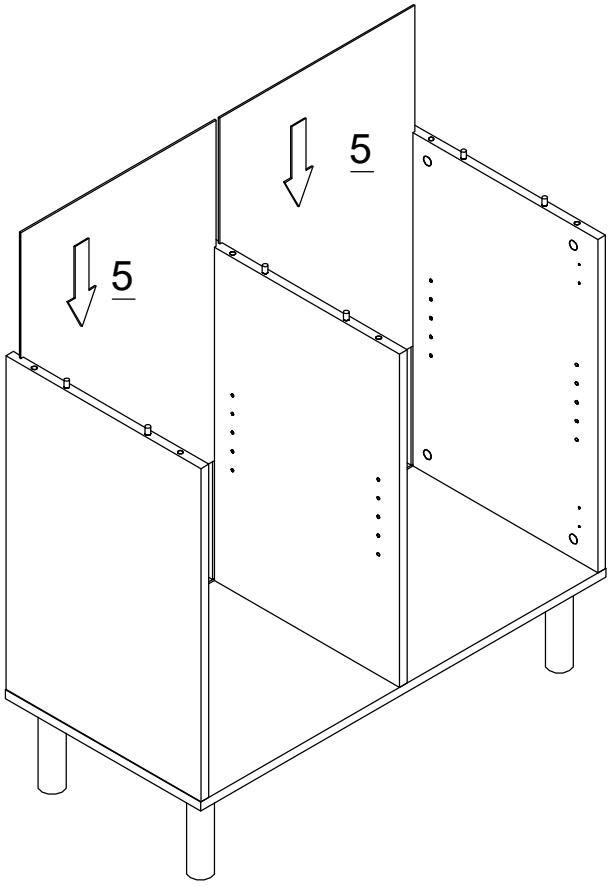

STEP7

HARDWARE NEEDED:		
B.		6Pcs

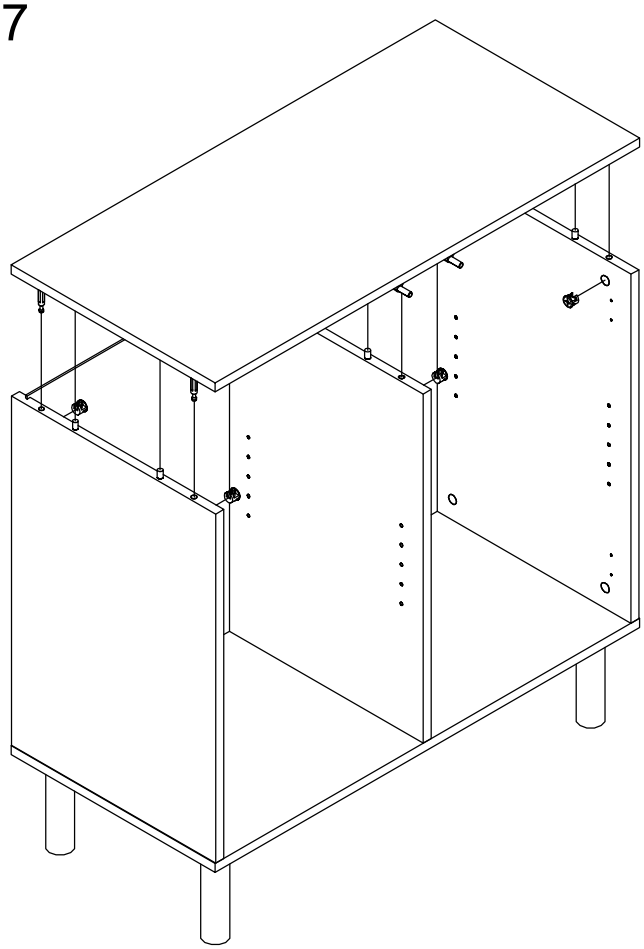

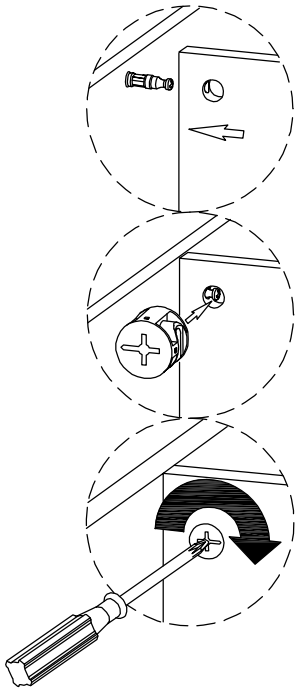

STEP8

HARDWARE NEEDED:		
C.		12Pcs
H.		12Pcs

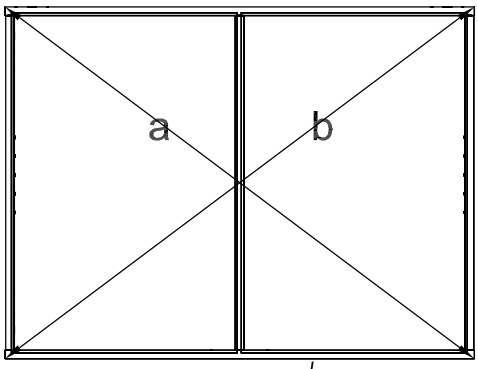

a=b √

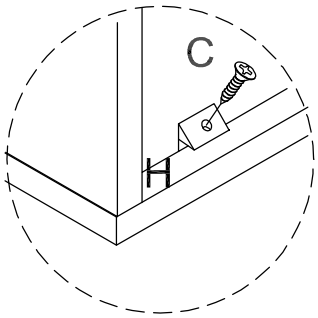

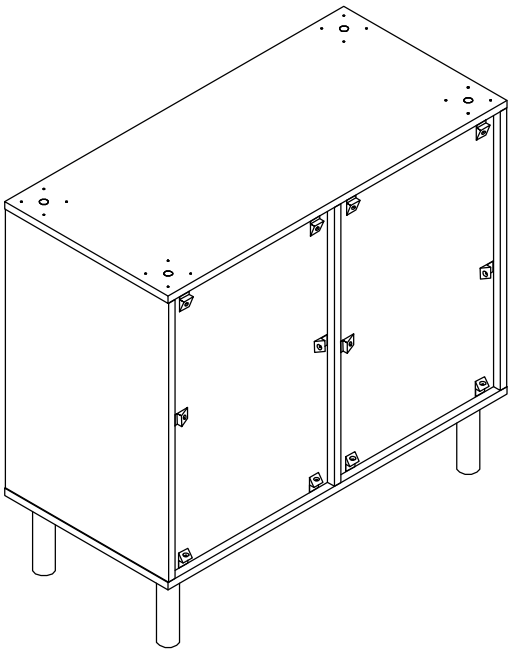

STEP9

HARDWARE NEEDED:		
J.		8Pcs
K.		32Pcs

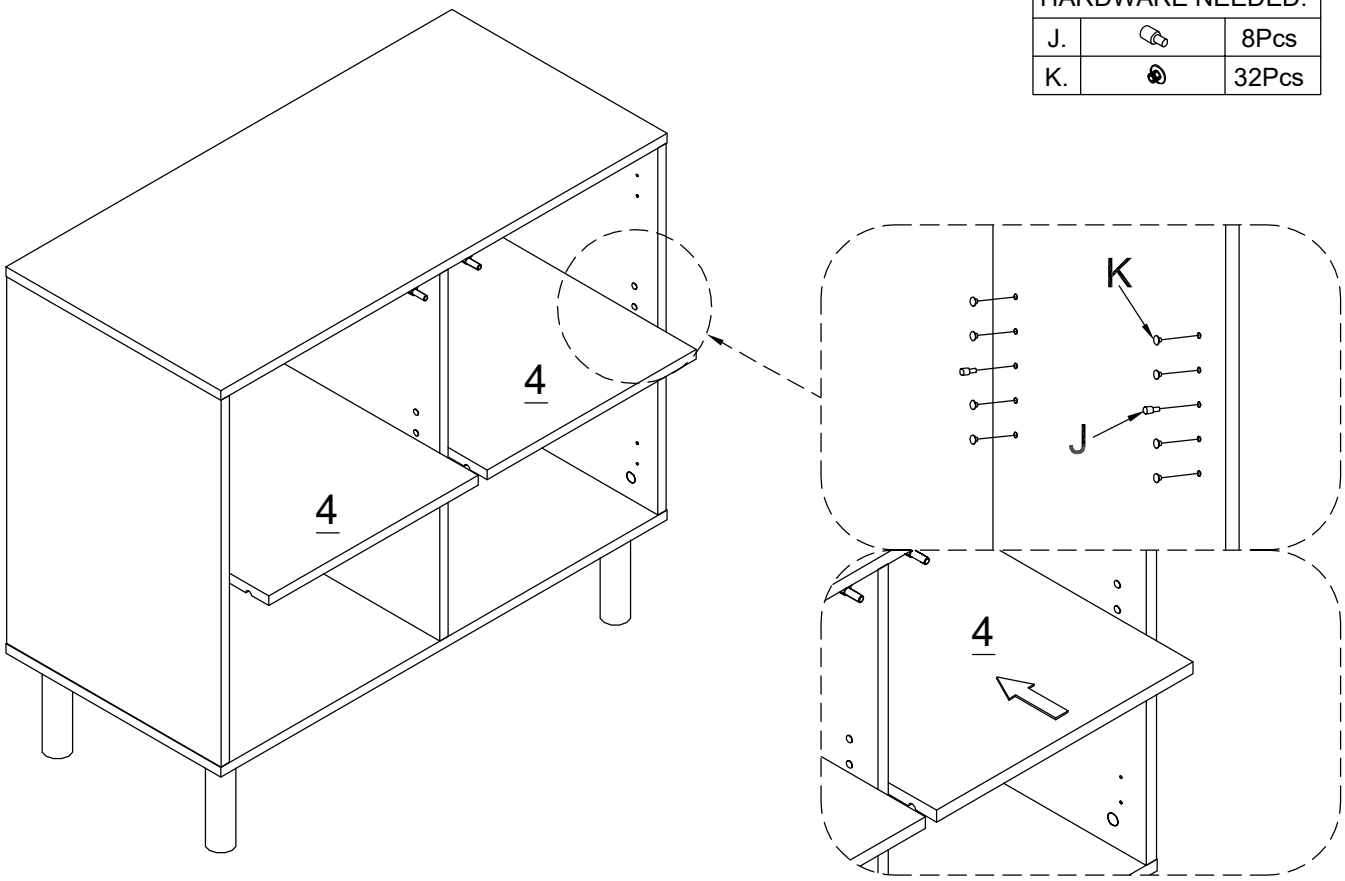

STEP10

HARDWARE NEEDED:		
C.		10Pcs
G.		4Pcs
F3.		2Pcs

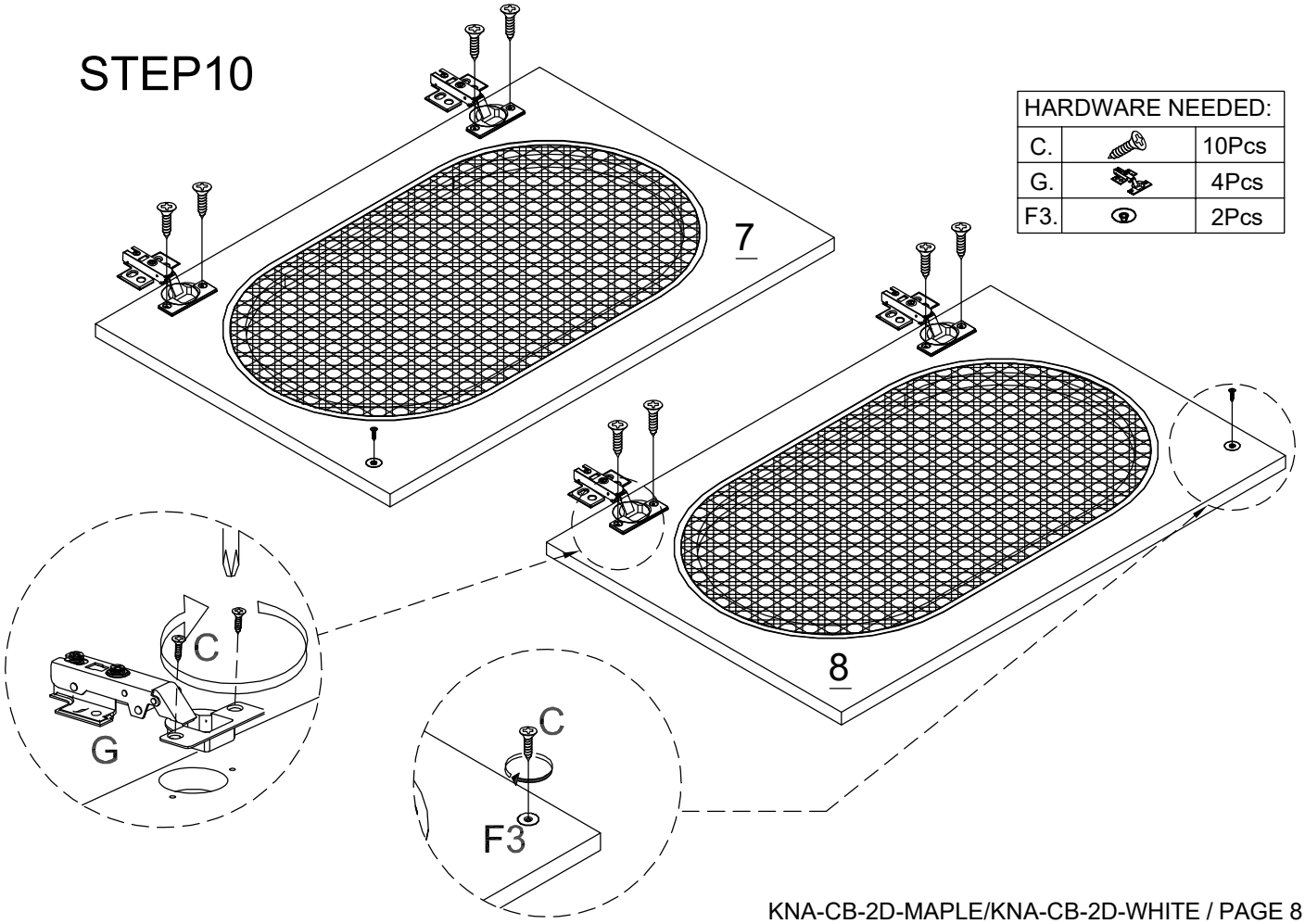

STEP11

HARDWARE NEEDED:		
C.		16Pcs

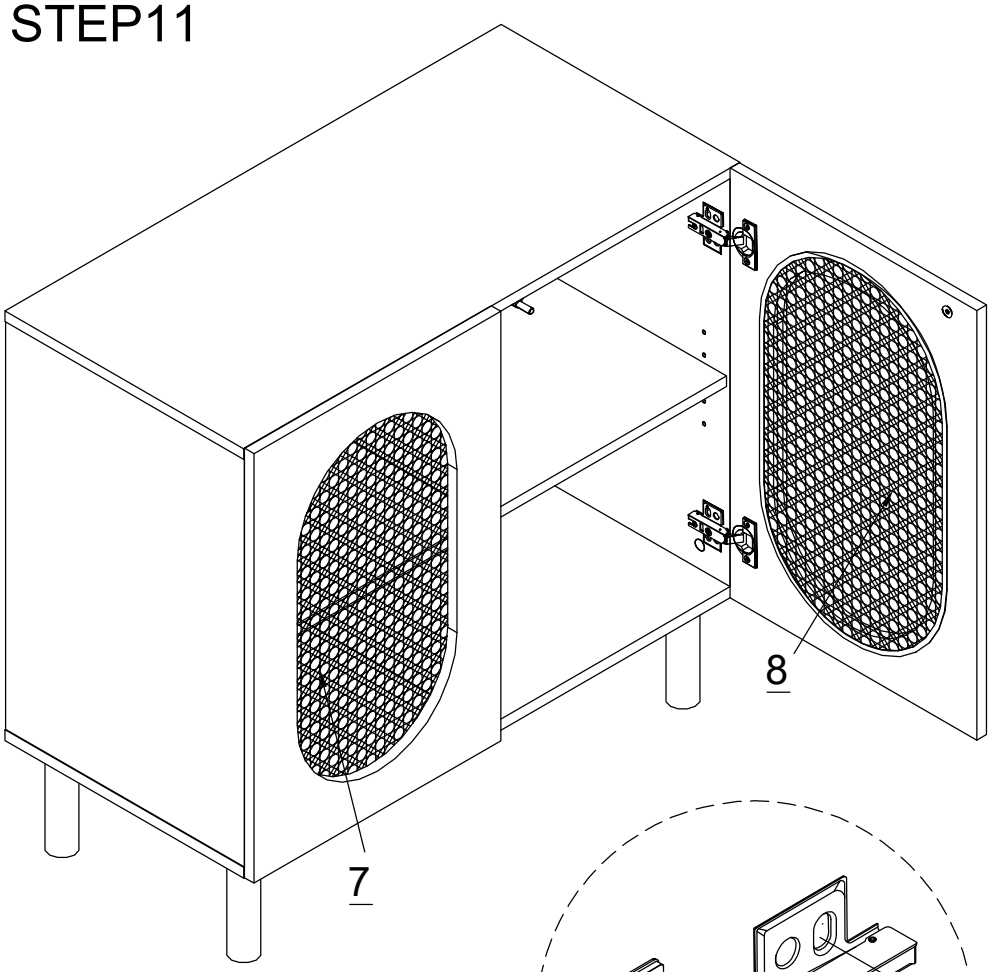

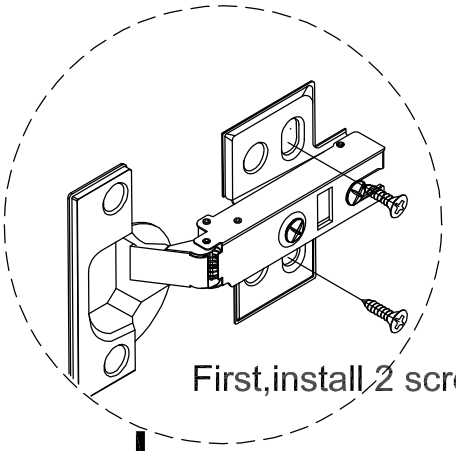

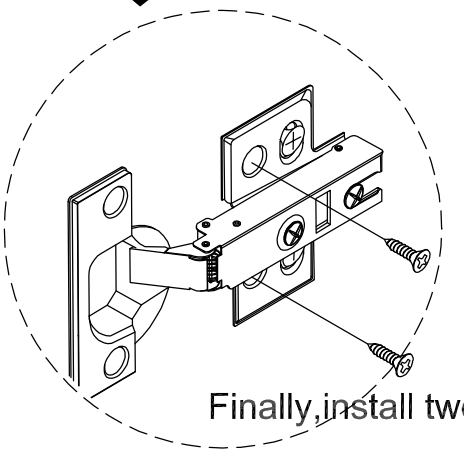

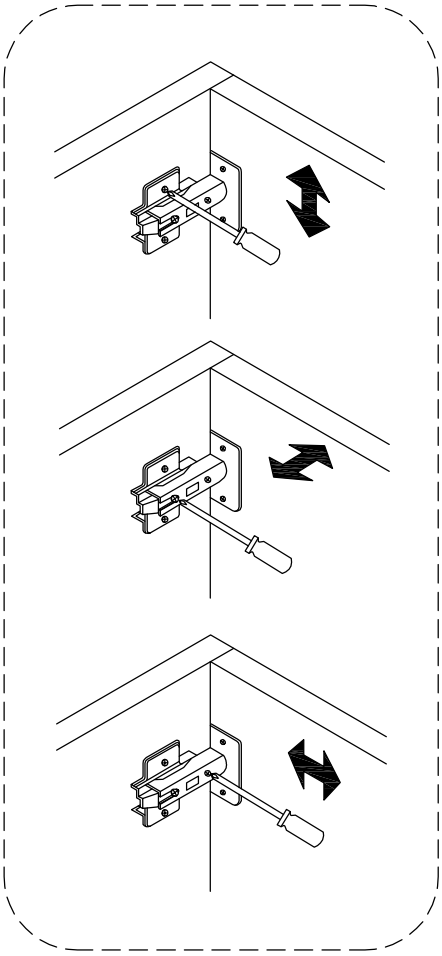

STEP12

HARDWARE NEEDED:		
I.		12Pcs

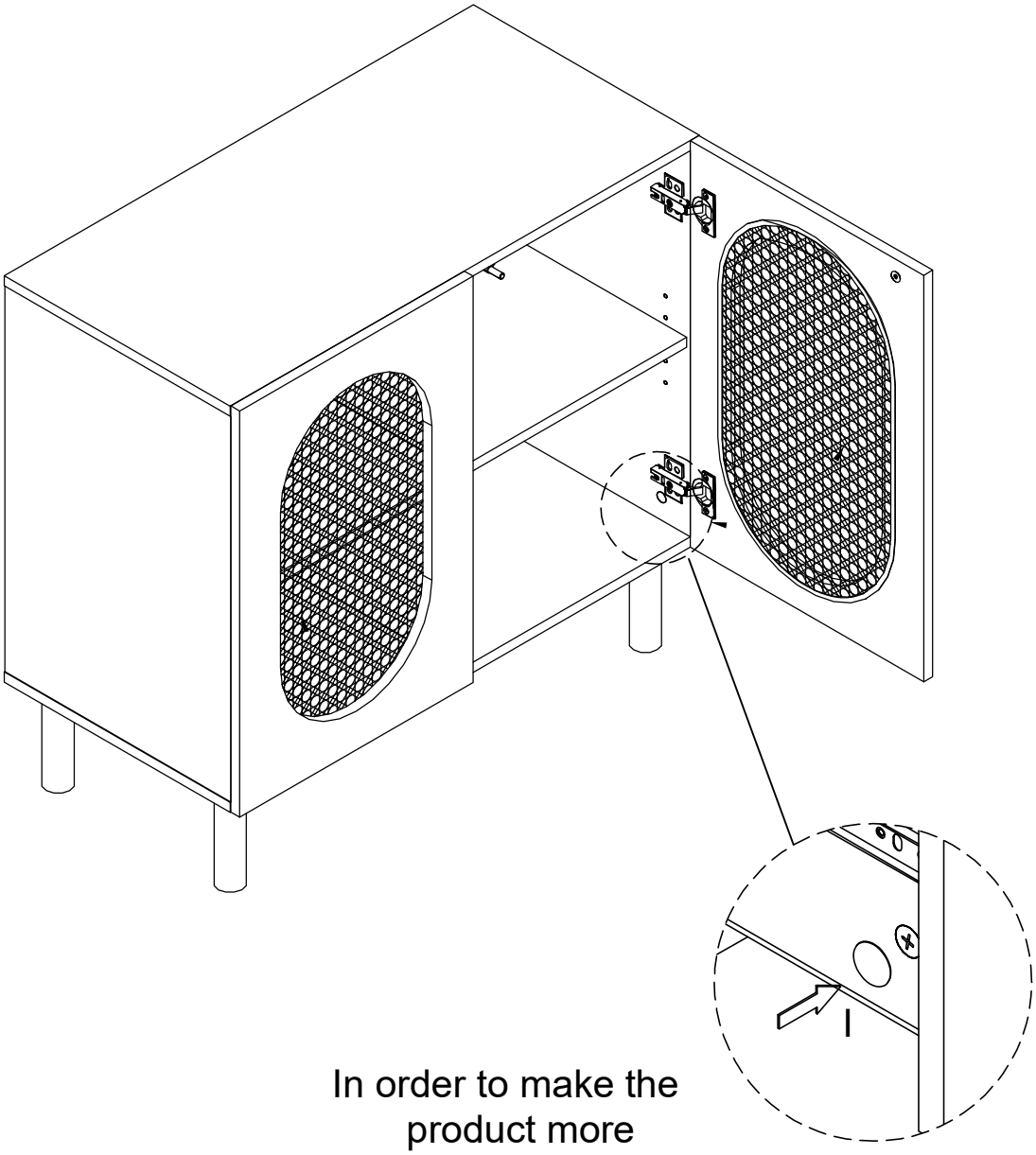

In order to make the product more beautiful, please paste hardware K on the exposed holes