ASSEMBLY INSTRUCTION

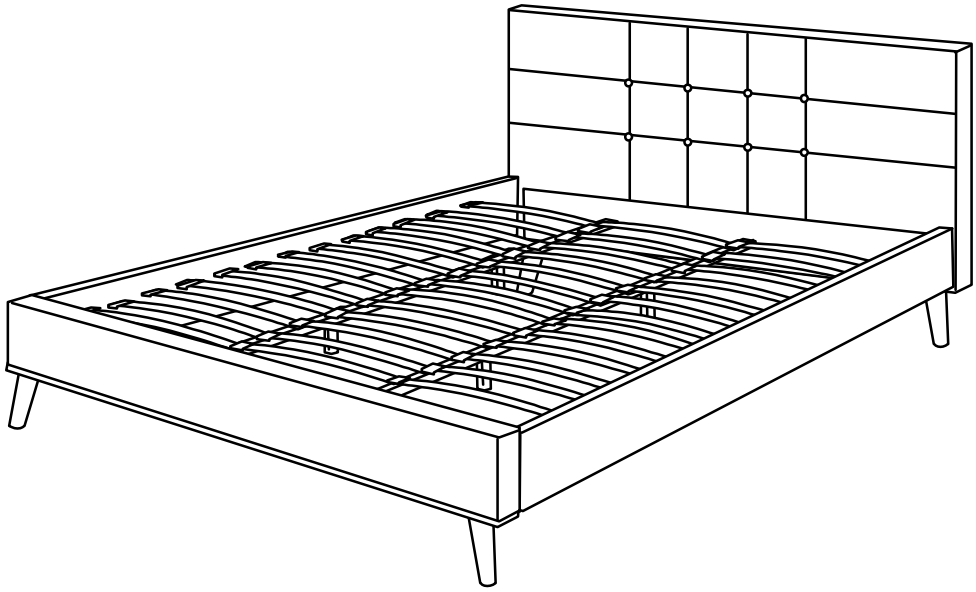

Dimension
Height : 1055 mm
Width : 1920 mm
Length : 2180 mm

TALIA KING BED

Important : Please read these instruction carefully before starting assembly.

IMPORTANT TIPS AND MAINTANANCE

i)Keep children and animal away from working area because smaller part could choke if swallowed.

ii)Never put the liquid or damp on the furniture.

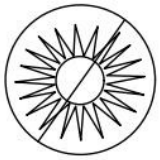

iii)To avoid dulling, do not place directly to the sunlight.

iv)Never use ammonia cleaning product, because it will damage to finish.

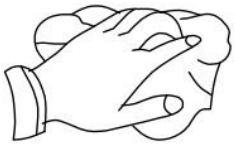

v)Use a soft or damp cloth (dry cloth)and then wipe to clean on the surface.

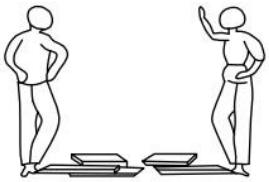

vi)Two person are required.

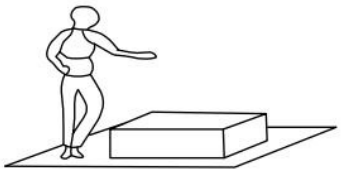

vii)Put the soft map on the floor to protect the furniture before assembly.

HARDWARE	Please check you have all the fitting parts or tools listed below

No.	Fittings / Tools	Quantities	No.	Fittings / Tools	Quantities
A	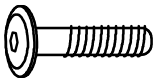 Bolt M8 x 25mm	16pcs	F	M5 Allen Key	1pc
B	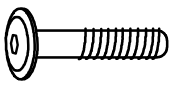 Bolt M8 x 30mm	8pcs	G	M8 Spanner	1pc
C	M8 Hex Nut	8pcs	H	Screw Driver	1pc
D	Washer	8pcs	I	Non Slip Pad	4pcs
E	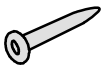 Wood Screw	16pcs			

PARTS	Please check you have all the parts listed below

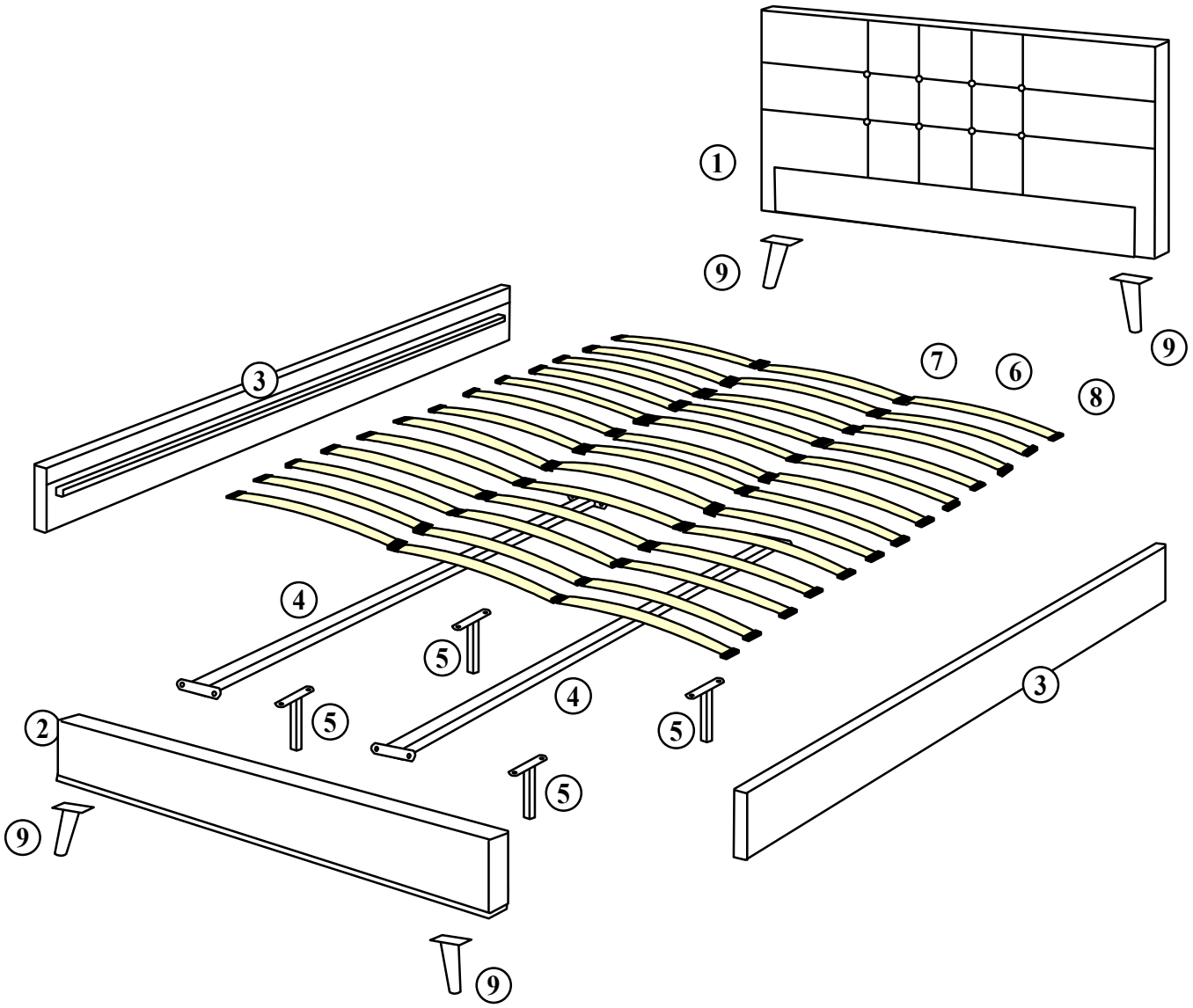

1	Head End	1pc	5	Support Leg	4pcs
2	Foot End	1pc	6	Wood Slat	39pcs
3	Siderail	2pcs	7	Centre Plastic Holder	26pcs
4	Centre Rail	2pcs	8	Side Plastic Holder	26pcs
			9	Wood Leg	4pcs

Step 1

Hardware Needed		
E	Wood Screw	16pcs
I	Non Slip Pad	4pcs
	Screw Driver	

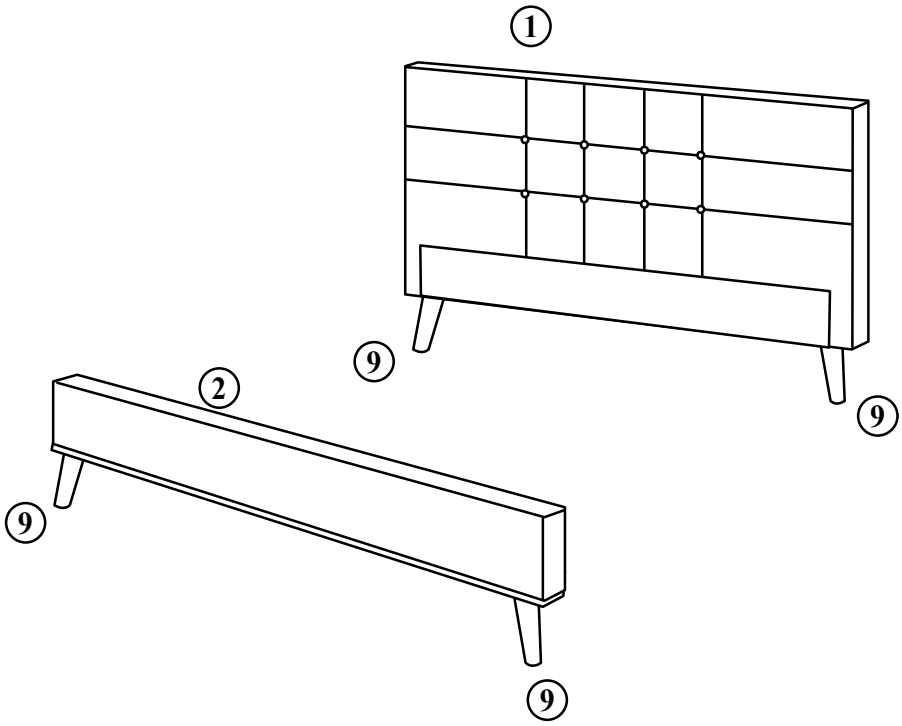

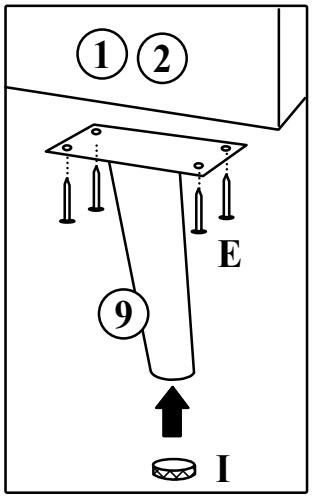

Step 2

Hardware Needed		
A	Bolt M8 x 25	8pcs
D	Washer	8pcs
	Allen Key	

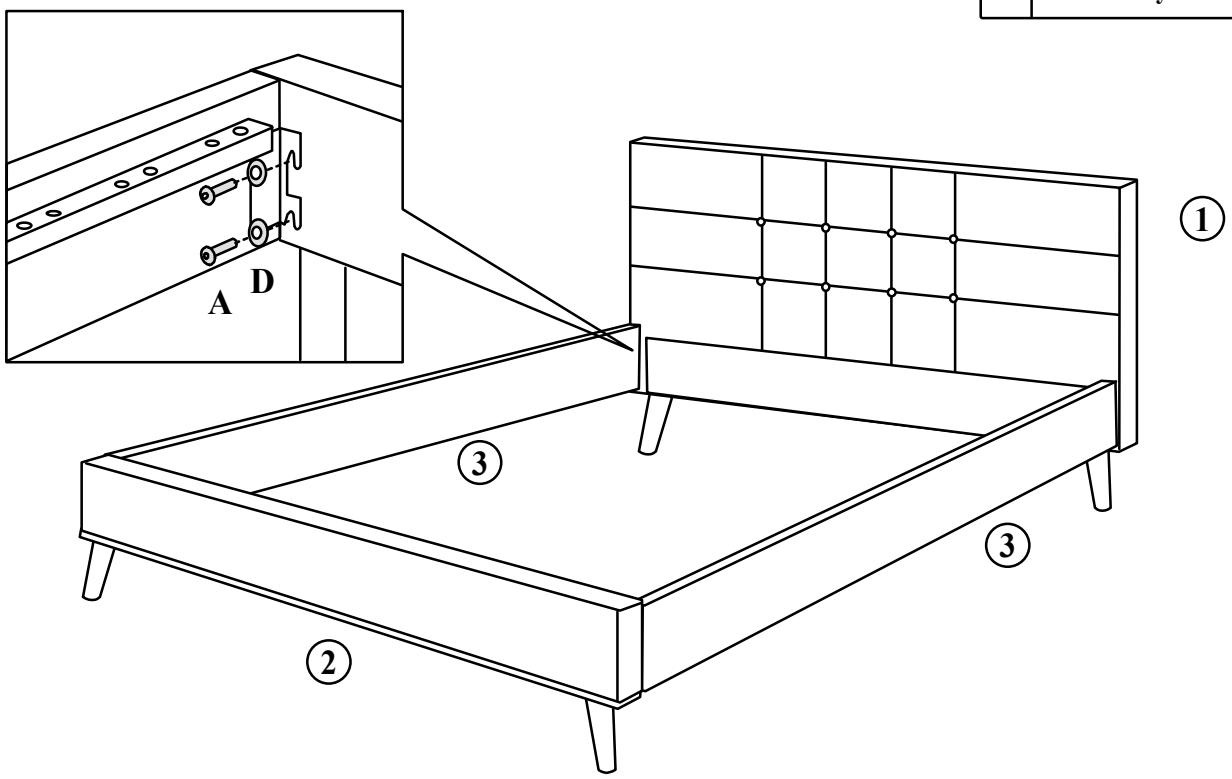

Step 3

Hardware Needed		
A	Bolt M8 x 25	8pcs
B	Bolt M8 x 30	8pcs
C	M8 Hex Nut	8pcs
	Allen Key	
	Spanner	

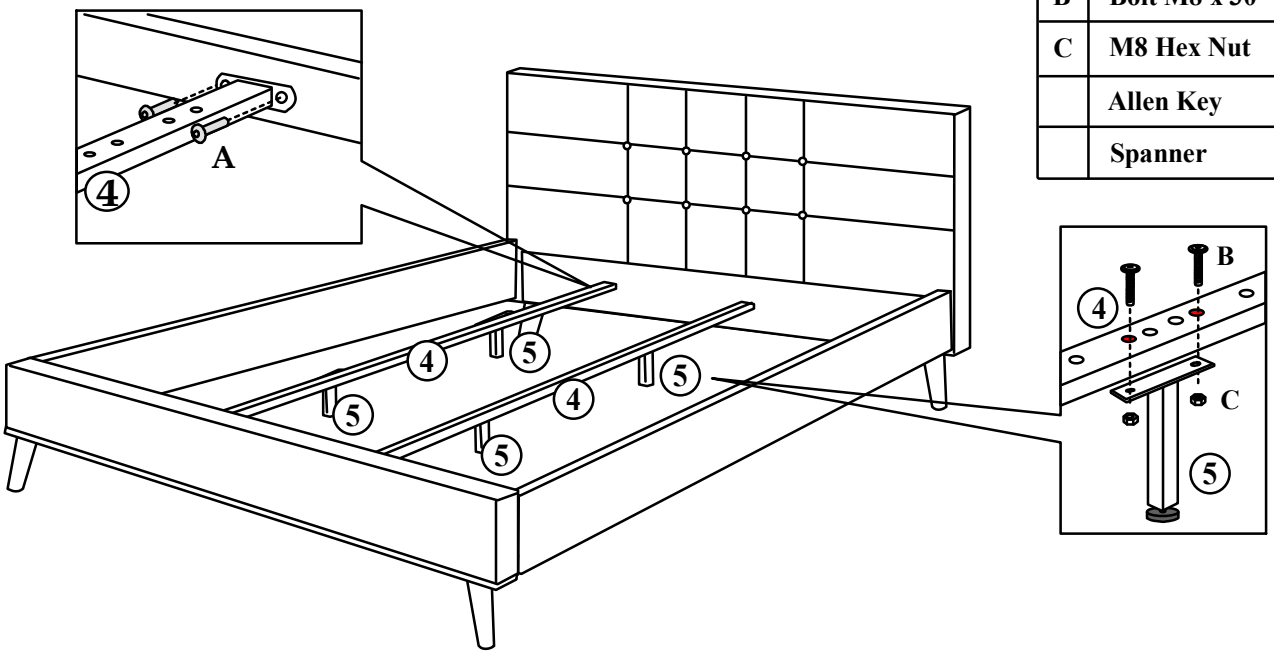

WARNING

1) If the bed has to be moved, lift the entire bed up when moving and DO NOT drag the bed across the floor.

2) Make sure the support legs (part 5) are not making direct contact with your floor, leave a maximum 2mm of space between the legs and floor.
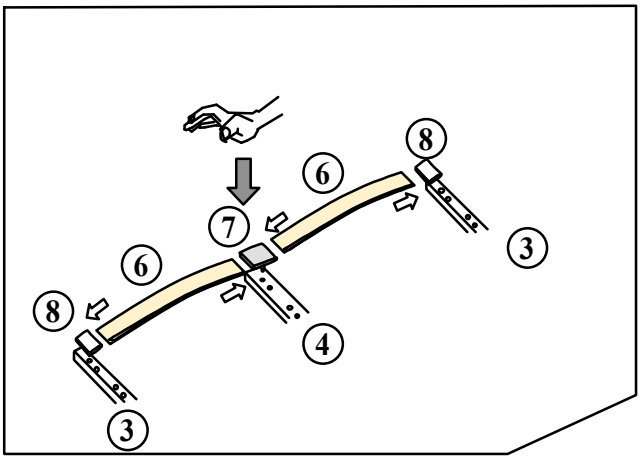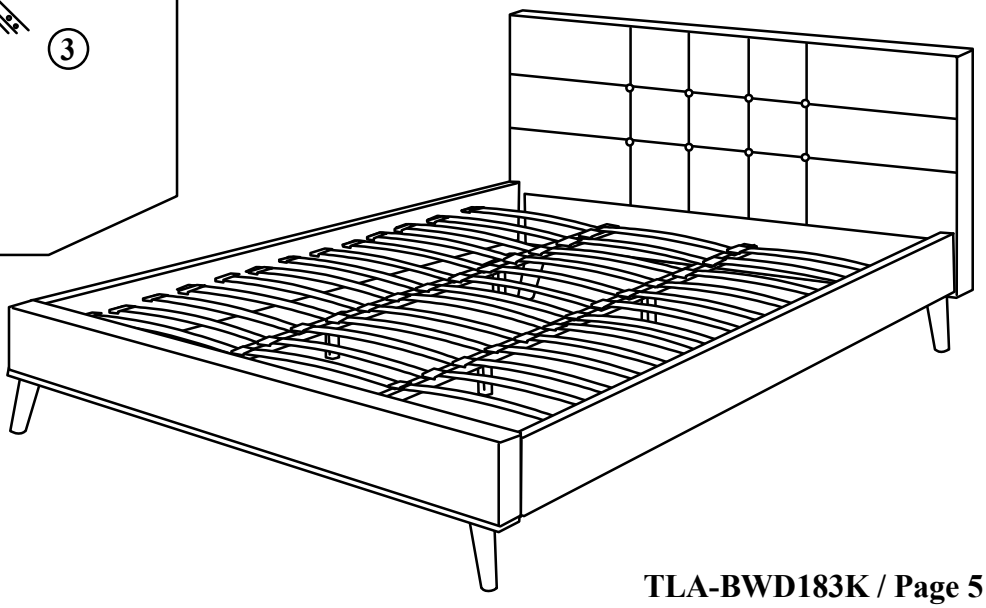
Step 4