Assembly Instruction

Nobu Series

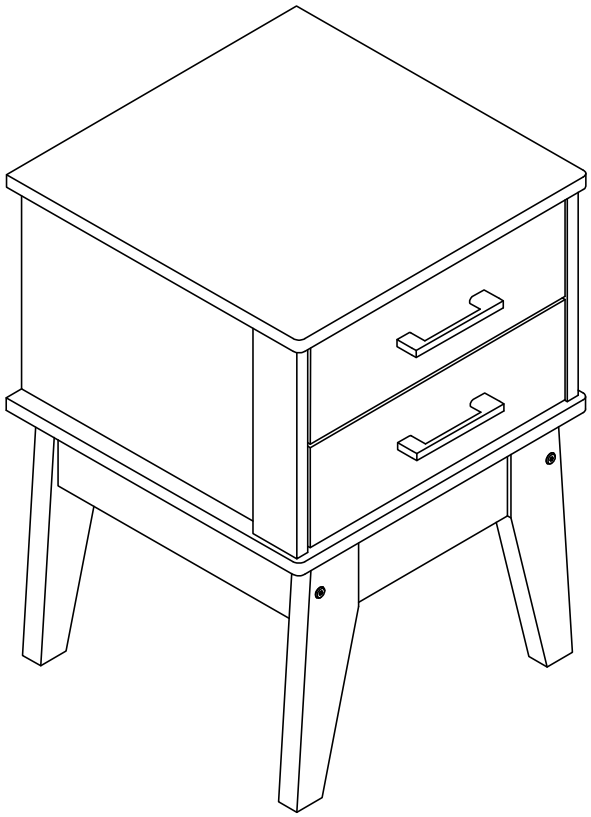

Lifely*

Product Code
NB BT445-OK BEDSIDE TABLE

Dimension (W x D x H)
400x400x575mm

Important

Please read through instruction carefully
Before assembly and keep for future reference.

For our full catalogue of assembly instructions,
Visit: lifely.com.au/assembly.

Important Tips and Maintenance

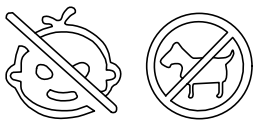

1.

Keep children and animals away from working area as smaller parts may cause choking if swallowed.

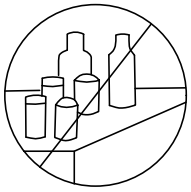

2.

Never place liquids or anything damp upon furniture as it will mark. Ensure a coaster or running is beneath.

3.

Never use ammonia based cleaning products as it will damage the finish

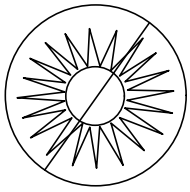

4.

To avoid fading, keep furniture out of direct sunlight.

5.

Use a soft or damp cloth (dry cloth) when wiping or cleaning surfaces.

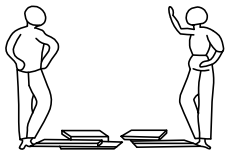

6.

Two person are required.

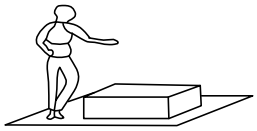

7.

Lay a soft matt down to protect the furniture piece before and during assembly.

So your relationship is strong. But is it flat-pack furniture strong? Unless you're and aerospace engineer, assembling furniture can be slightly stressful. We recommend meditating quietly, pouring yourself a herbal tea (or slightly less herbal wine) and tackling things one step at a time.If you feel a passive aggressive remark coming on, try a compliment instead. E.g. "You're so good looking".

This 24-Step assembly should take around 40 minutes with an Allen Key or 25 minutes with an electric drill. Godspeed.

Designed for everyday

Component Hardware

Please check you have all the fittings
part or tools are listed below.

No. A
Quantity:44Pcs
Dowel 6 X 30mm

No. B
Quantity:4Pcs
Bolt M7 X 60mm

No. C
Quantity:22Pcs
Screw M3.5 X 12mm

No. D
Quantity:4Pcs
Screw M4 X 38mm

No. E
Quantity:4Pcs
Screw M4 X 25mm

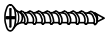

No. F
Quantity:8Pcs
M6 X 50mm

No. G
Quantity:2Pcs
Handle

No. H
Quantity:8Sets
Cam Bolt + Cam Nut

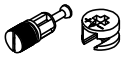

No. I
Quantity:4Pcs
PVC Glide

No. J
Quantity:12Pcs
Screw M3.5 X 16mm

No. K
Quantity:4Pcs
Drawer Runner A-L/R

No. L
Quantity:4Pcs
Drawer Runner B-L/R

No. M
Quantity:1Pc
Allen Key

No. N
Quantity:1Pc
Spanner

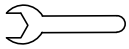

No. O
Quantity:4Sets
Plastic Corner Block

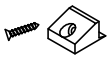

No. P
Quantity:4Pcs
Flange Nut

Component Panel & Part List

Please check you have all the panels are listed below.

1. Pillar Leg-left - - - - - - - - - - - - x2
2. Pillar Leg-right - - - - - - - - - - - x2
3. Support Leg-front & back - - - x2
4. Support Leg-left & right - - - - -x2
5. Bottom Panel - - - - - - - - - - - -x1
6. Side Panel-left - - - - - - - - - - -x1
7. Side Panel-right - - - - - - - - - -x1
8. Back Panel - - - - - - - - - - - - - x1
9. Top Panel - - - - - - - - - - - - - -x1
10. Drawer Back - - - - - - - - - - - - x2
11. Drawer Side-left - - - - - - - - - -x2
12. Drawer Side-right - - - - - - - - -x2
13. Drawer Front - - - - - - - - - - - -x2
14. Drawer Base - - - - - - - - - - - - x2

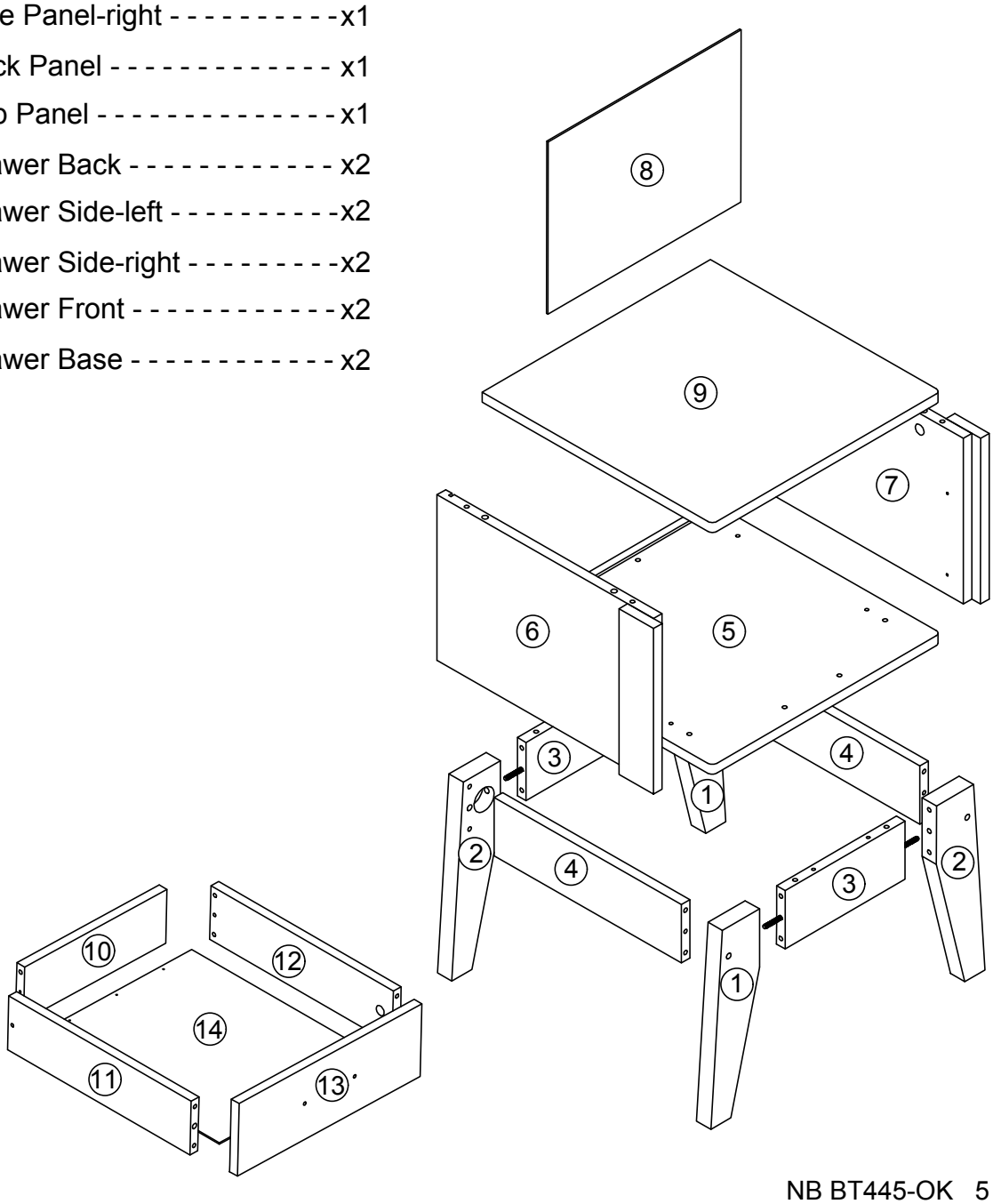

STEP 1

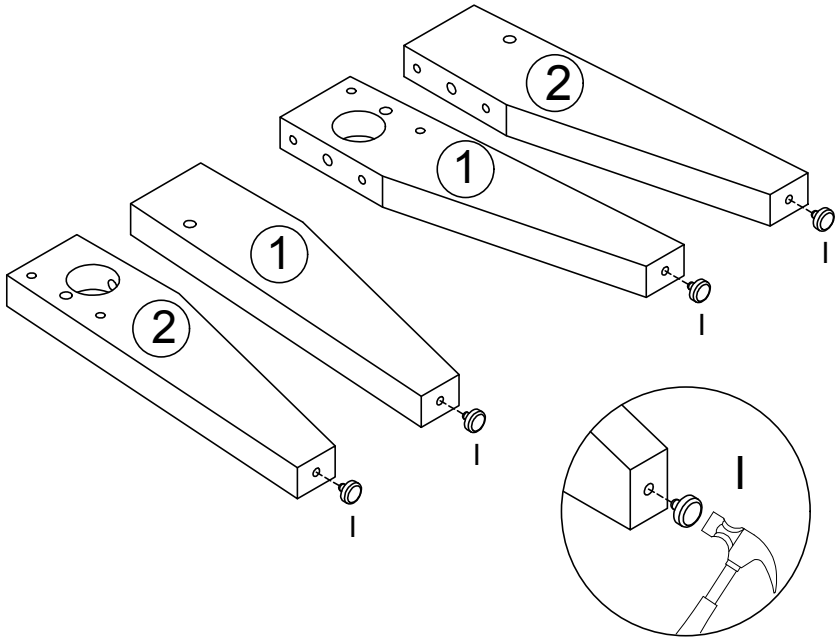

No. I
Quantity:4Pcs
PVC Glide

STEP 2

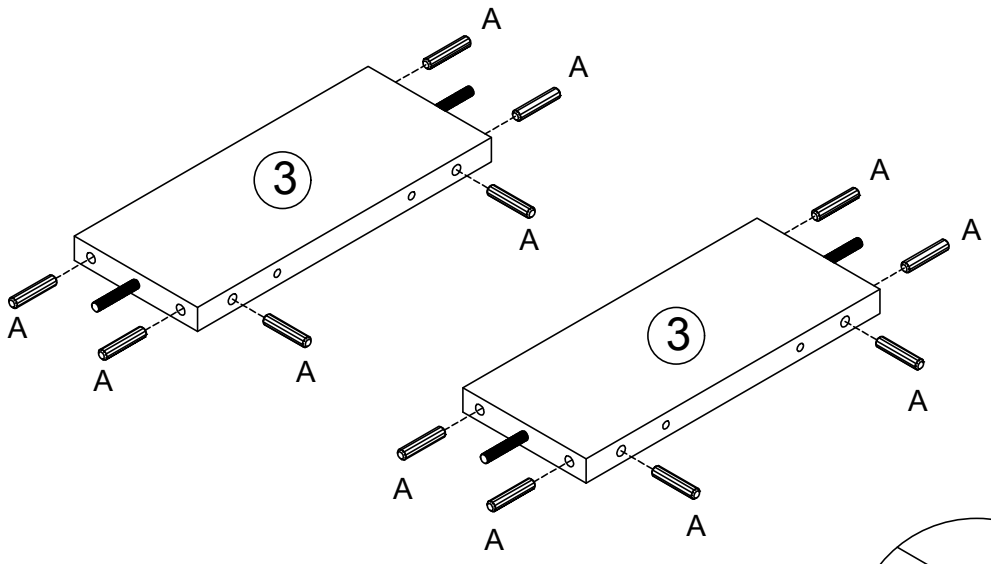

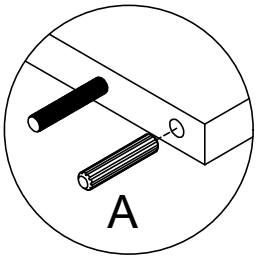

No. A
Quantity:12Pcs
Dowel 6 X 30mm

STEP 3

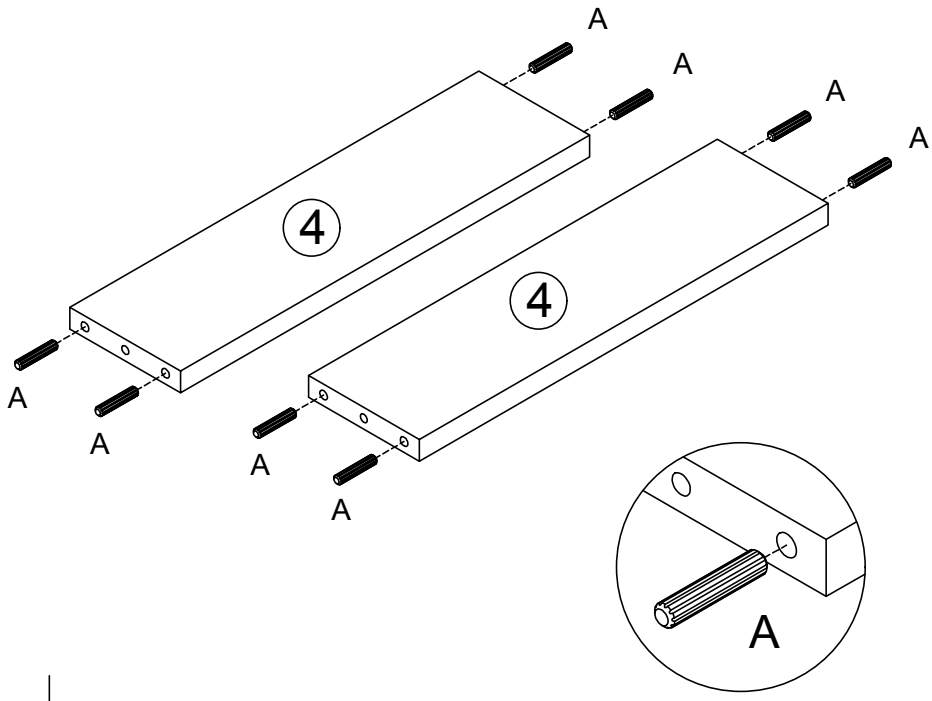

No. A
Quantity:8Pcs
Dowel 6 X 30mm

STEP 4

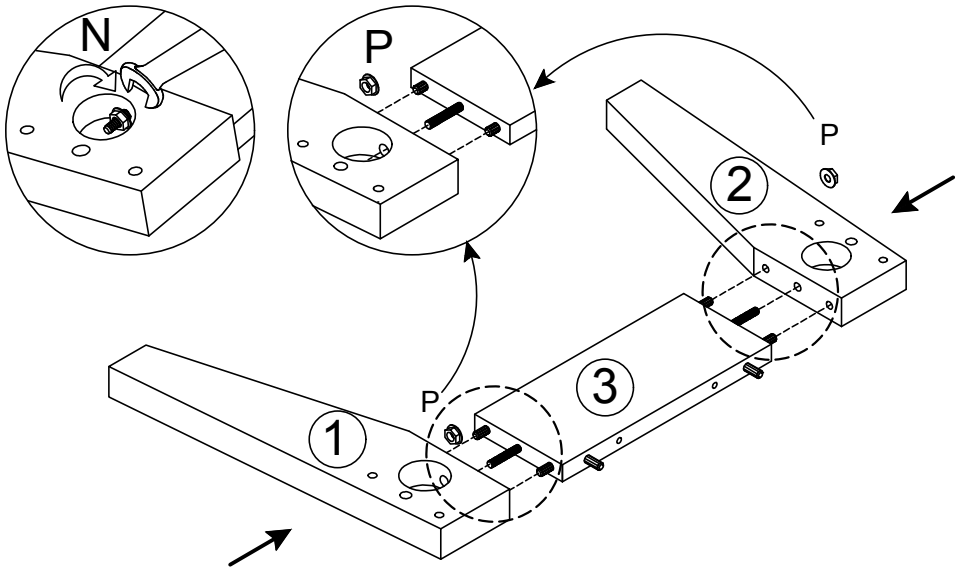

No. N
Quantity:1Pc
Spanner

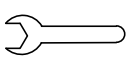

No. P
Quantity:4Pcs
Flange Nut

2X

STEP 5

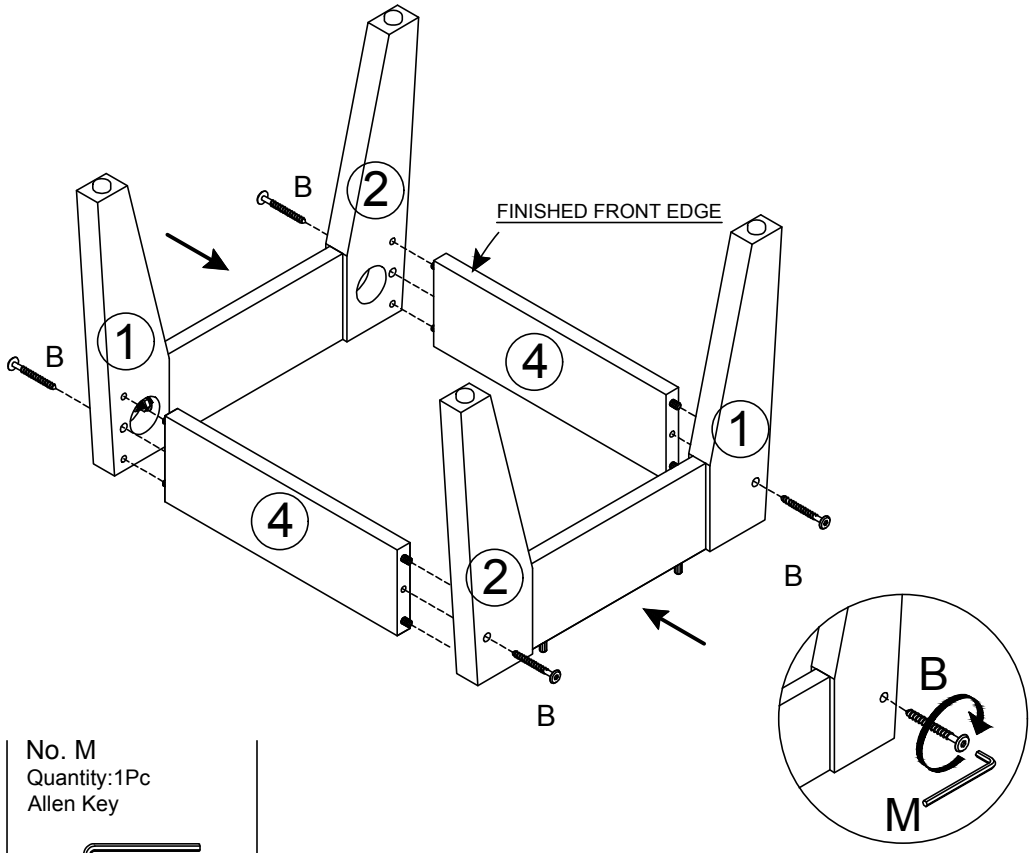

No. B
Quantity:4Pcs
Bolt M7 X 60mm

No. M
Quantity:1Pc
Allen Key

STEP 6

ARROW ON LOCKING NUT MUST POINT TOWARDS HOLE IN EDGE OF PANEL

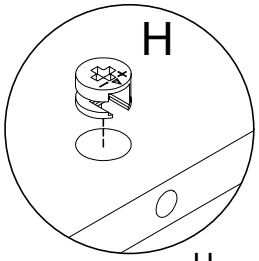

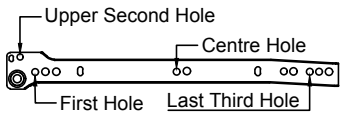

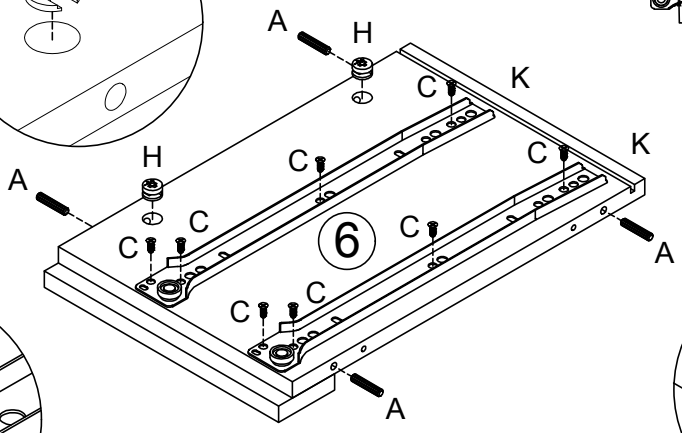

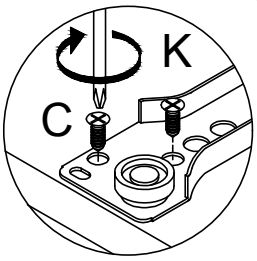

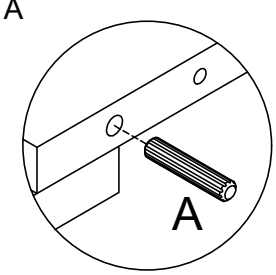

No. A
Quantity:4Pcs
Dowel 6 X 30mm

No. C
Quantity:8Pcs
Screw M3.5 X 12mm

No. H
Quantity:2Pcs
Cam Nut

No. K
Quantity:2Pcs
Drawer Runner A-L

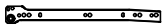

STEP 7

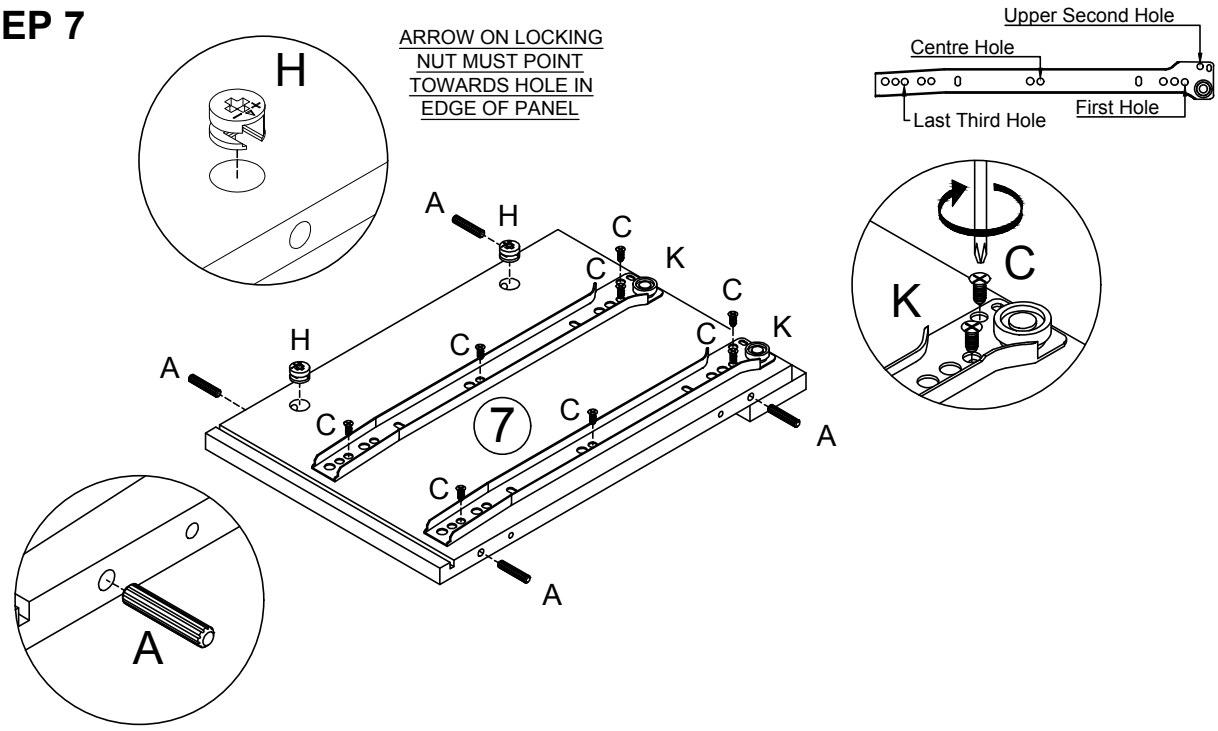

No. A
Quantity:4Pcs
Dowel 6 X 30mm

No. C
Quantity:8Pcs
Screw M3.5 X 12mm

No. H
Quantity:2Pcs
Cam Nut

No. K
Quantity:2Pcs
Drawer Runner A-R

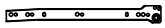

STEP 8

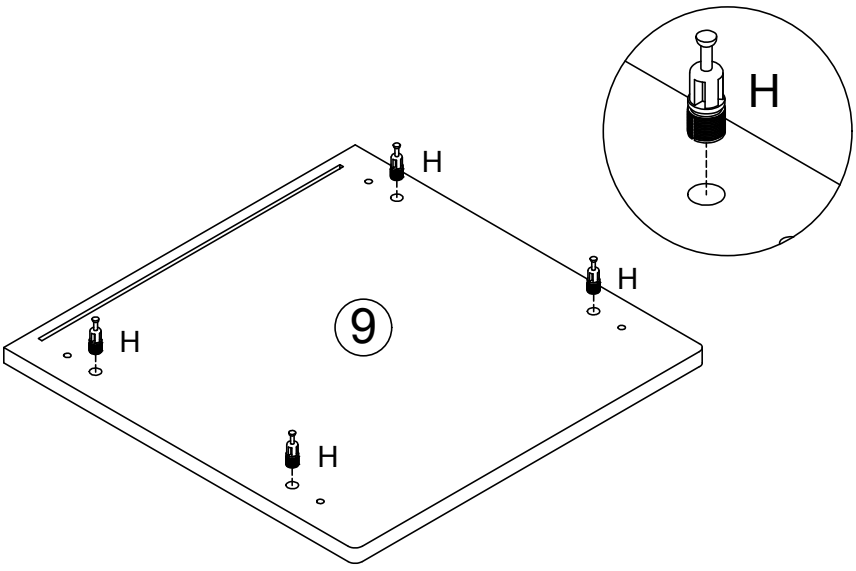

No. H
Quantity:4Pcs
Cam Bolt

STEP 9

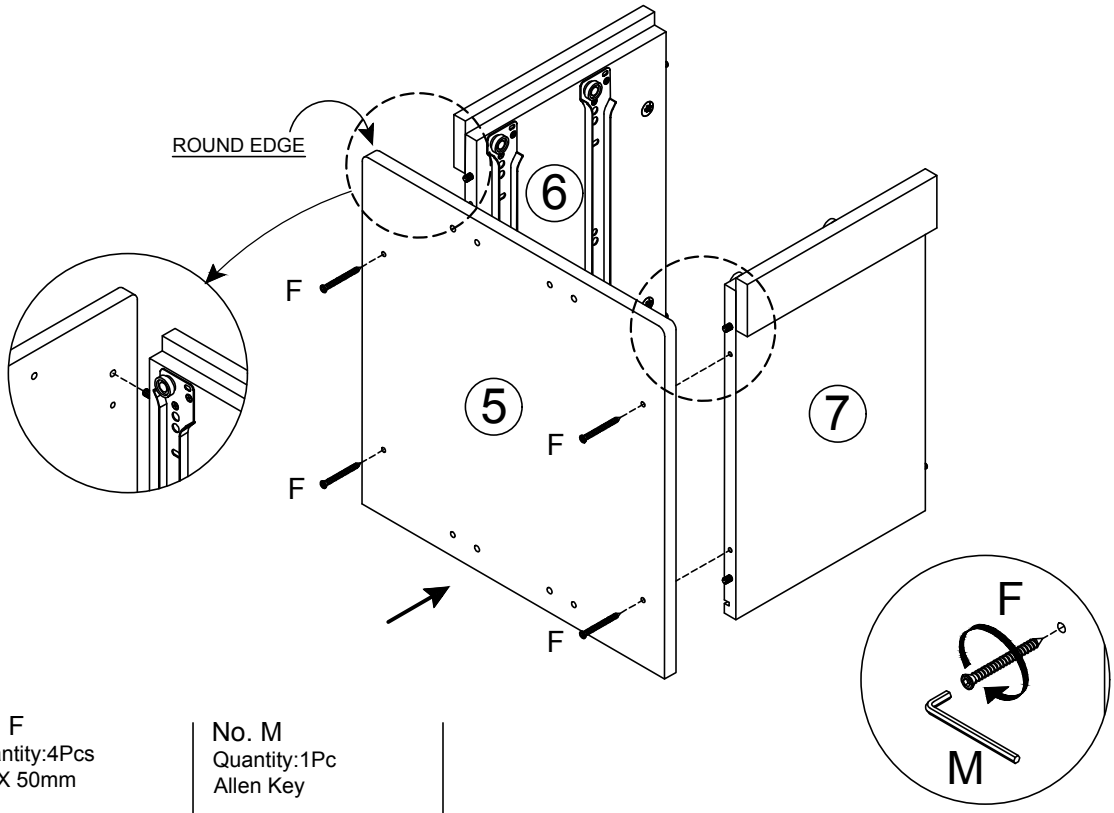

No. F
Quantity:4Pcs
M6 X 50mm

No. M
Quantity:1Pc
Allen Key

STEP 10

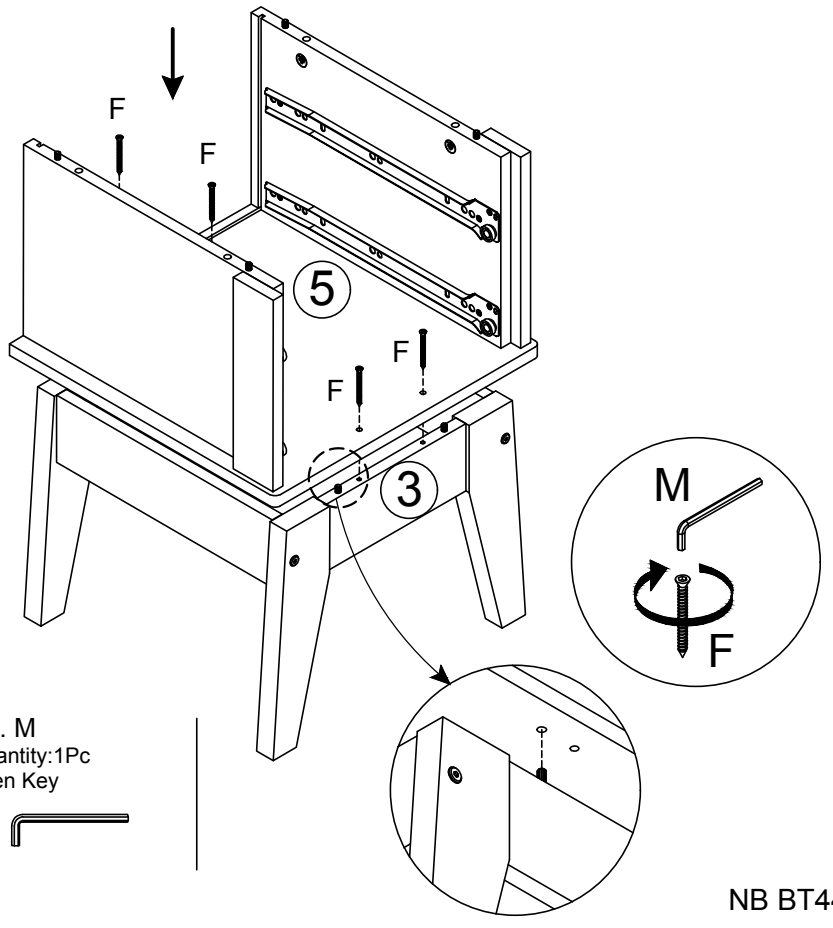

No. F
Quantity:4Pcs
M6 X 50mm

No. M
Quantity:1Pc
Allen Key

STEP 11

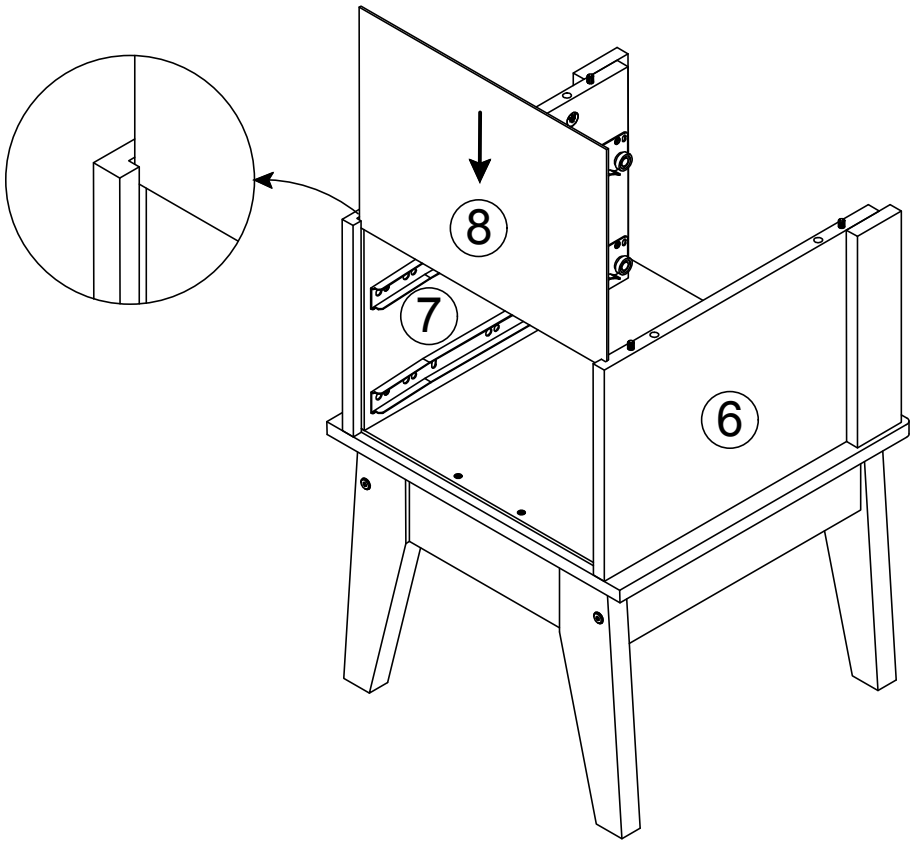

STEP 12

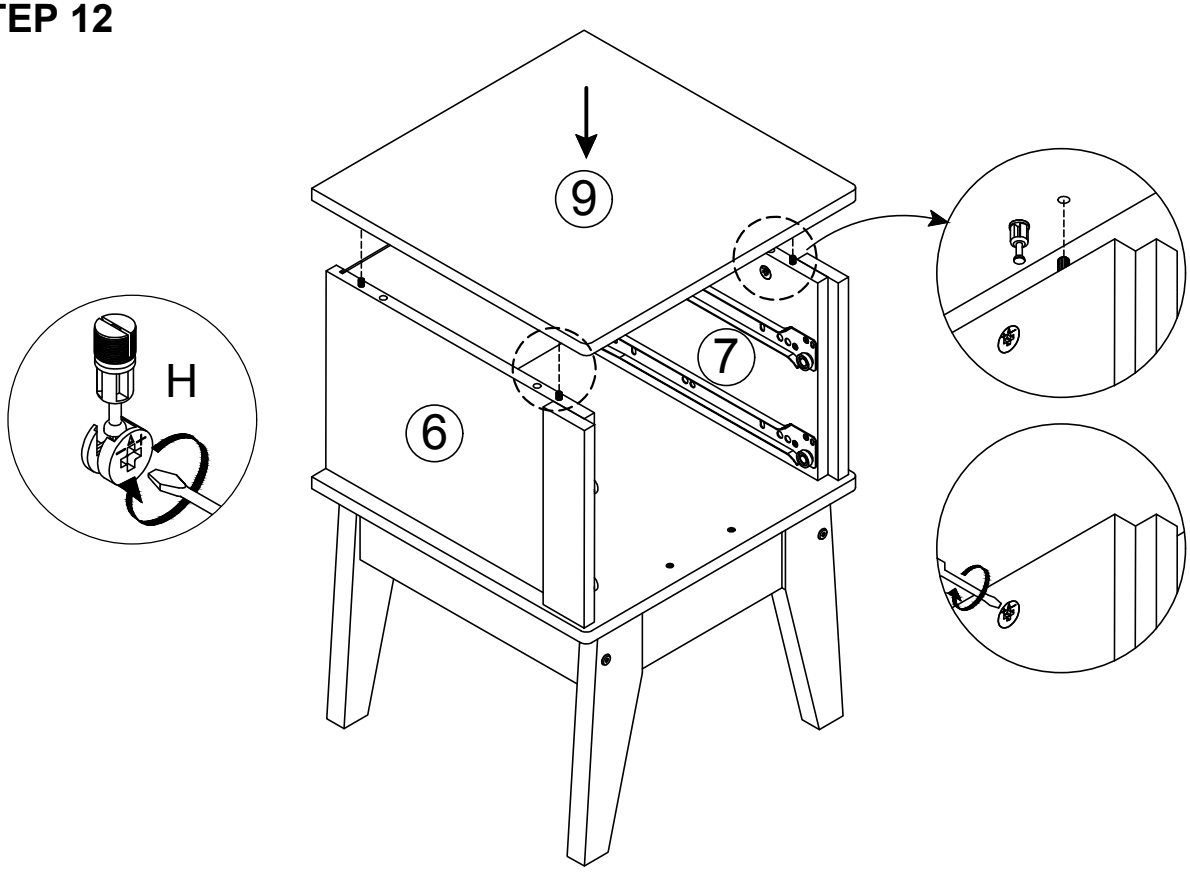

STEP 13

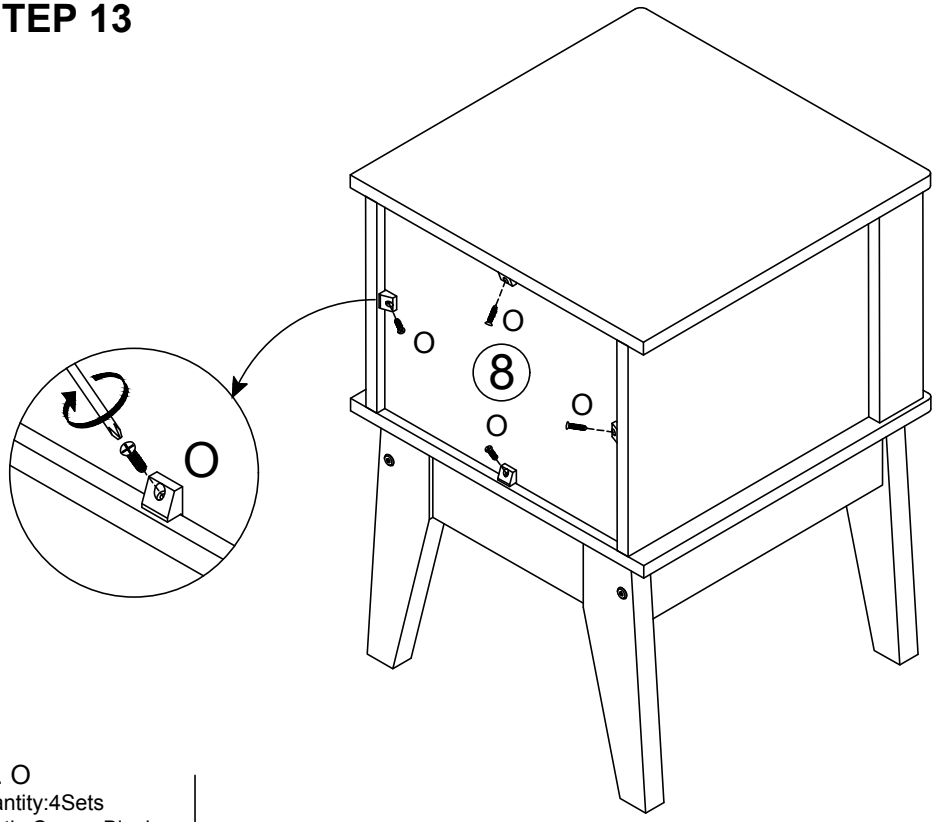

No. O
Quantity:4Sets
Plastic Corner Block

STEP 14

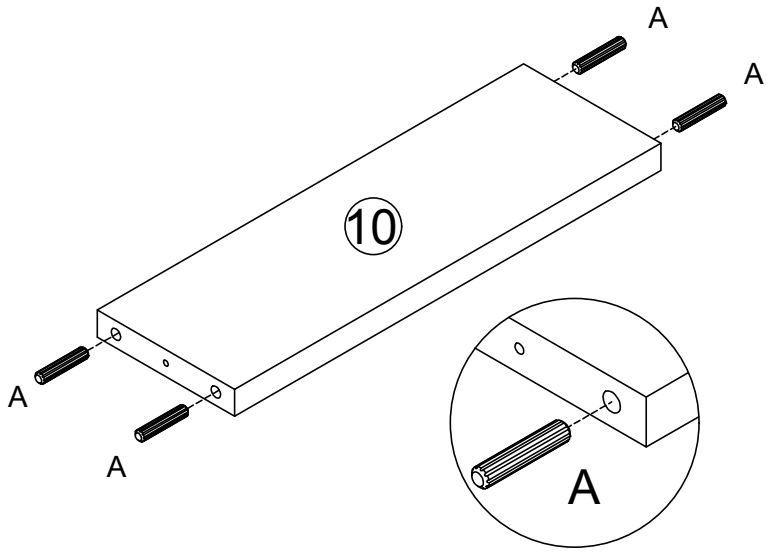

No. A
Quantity:8Pcs
Dowel 6 X 30mm

2X

STEP 15

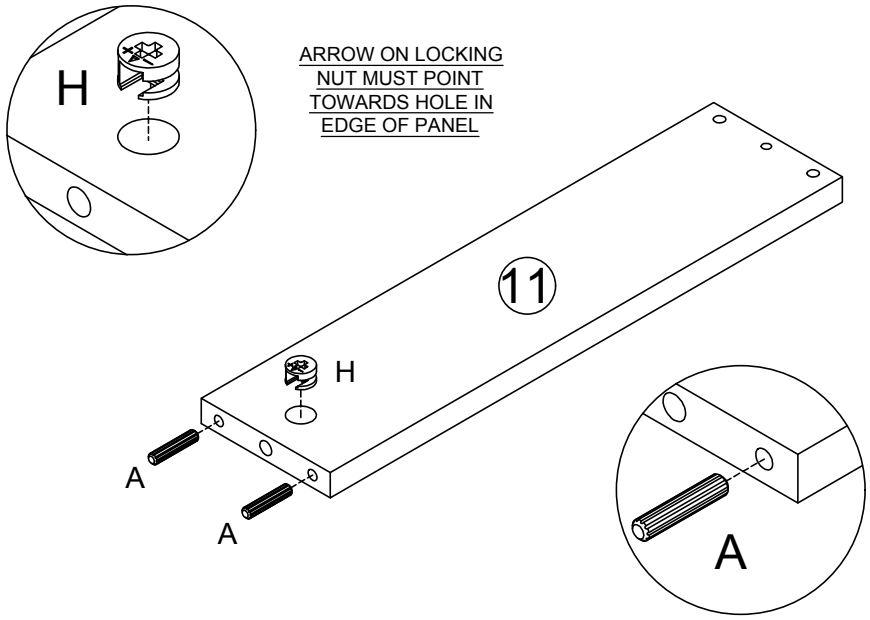

No. A
Quantity:4Pcs
Dowel 6 X 30mm

No. H
Quantity:2Pcs
Cam Nut

2X

STEP 16

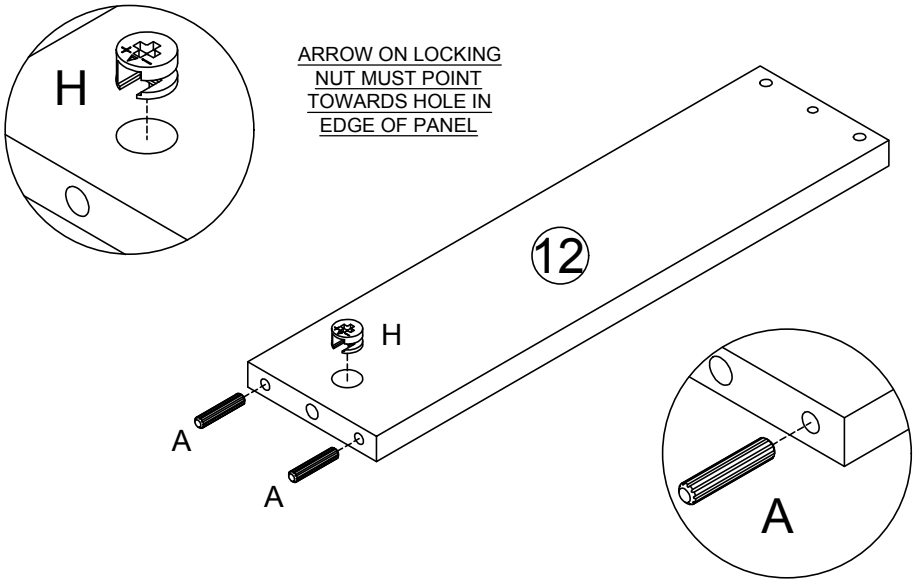

No. A
Quantity:4Pcs
Dowel 6 X 30mm

No. H
Quantity:2Pcs
Cam Nut

2X

STEP 17

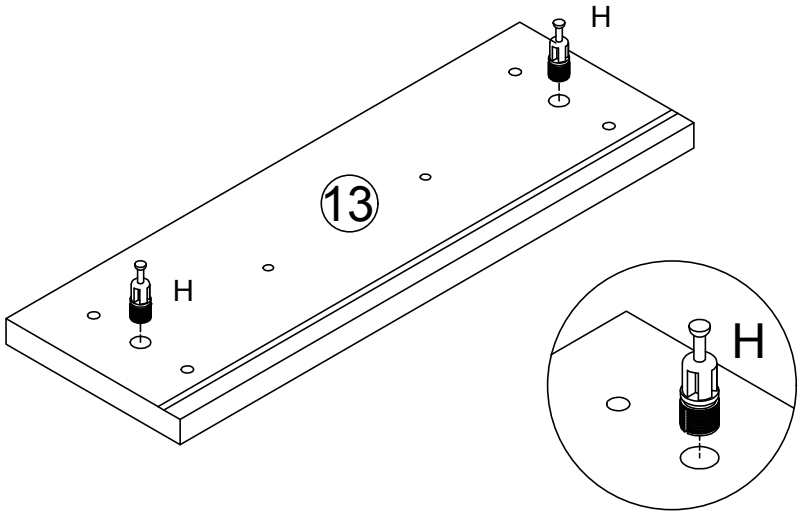

No. H
Quantity:4Pcs
Cam Bolt

2X

STEP 18

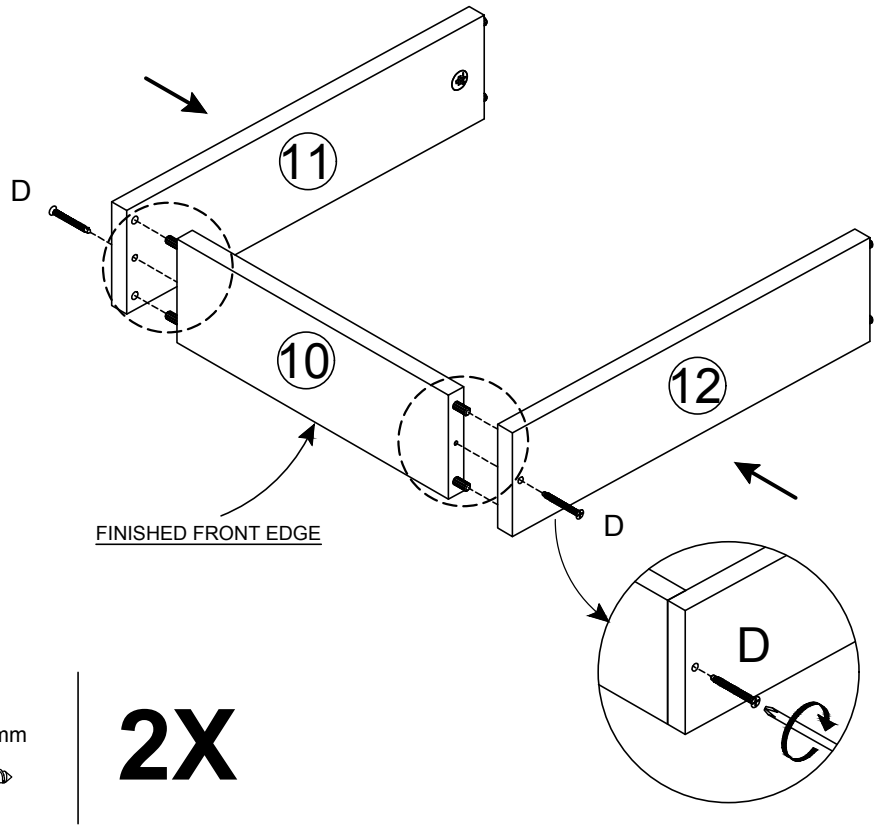

No. D
Quantity:4Pcs
Screw M4 X 38mm

2X

STEP 19

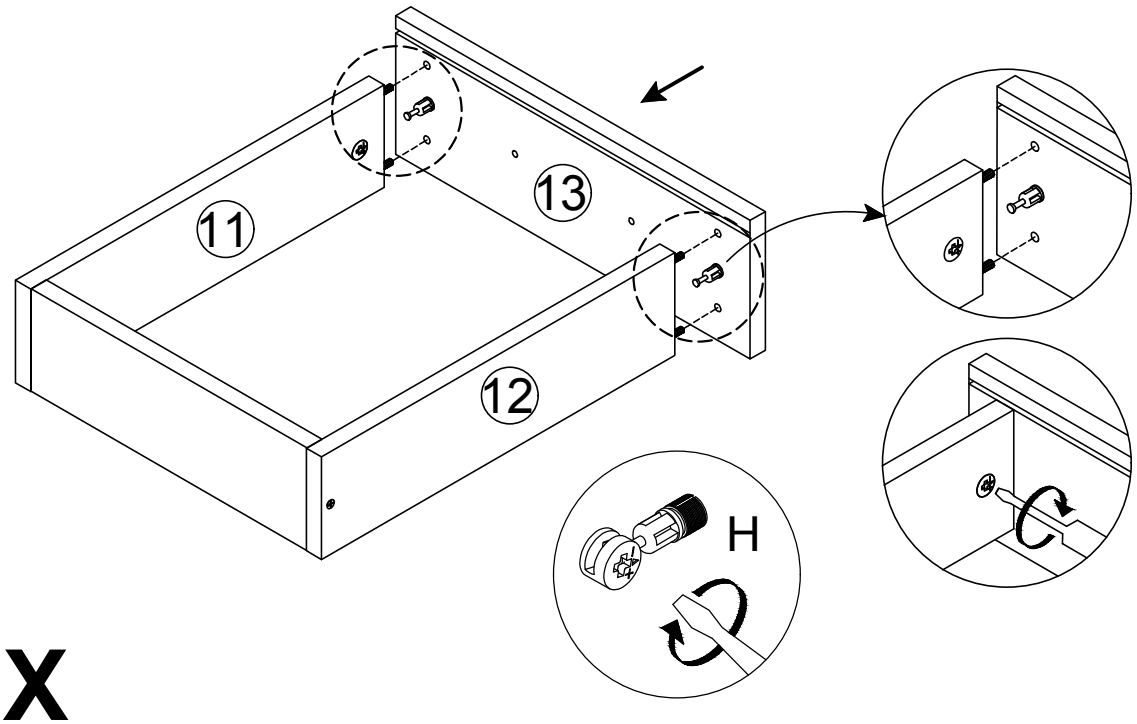

2X

STEP 20

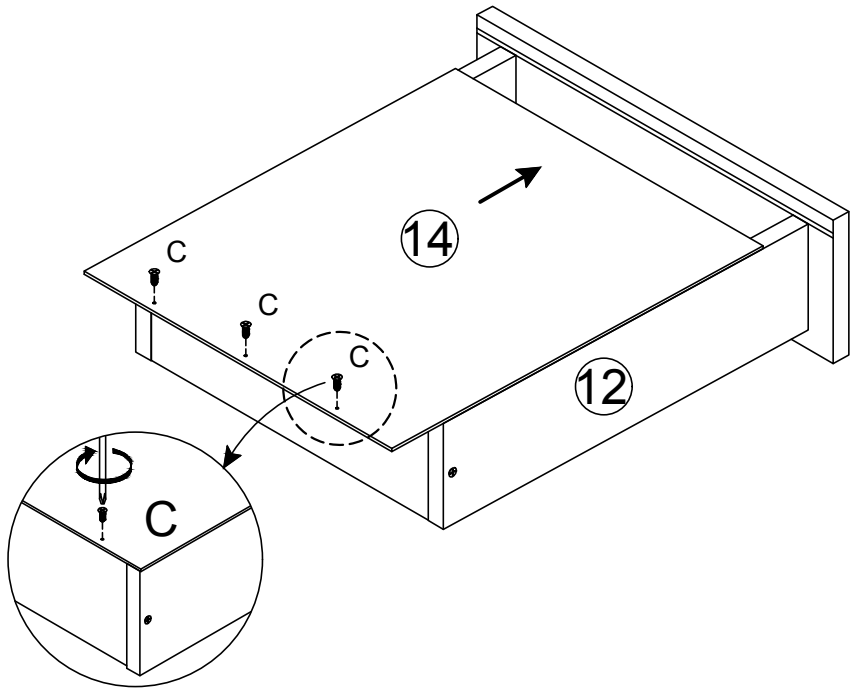

No. C
Quantity:6Pcs
Screw M3.5 X 12mm

2X

STEP 21

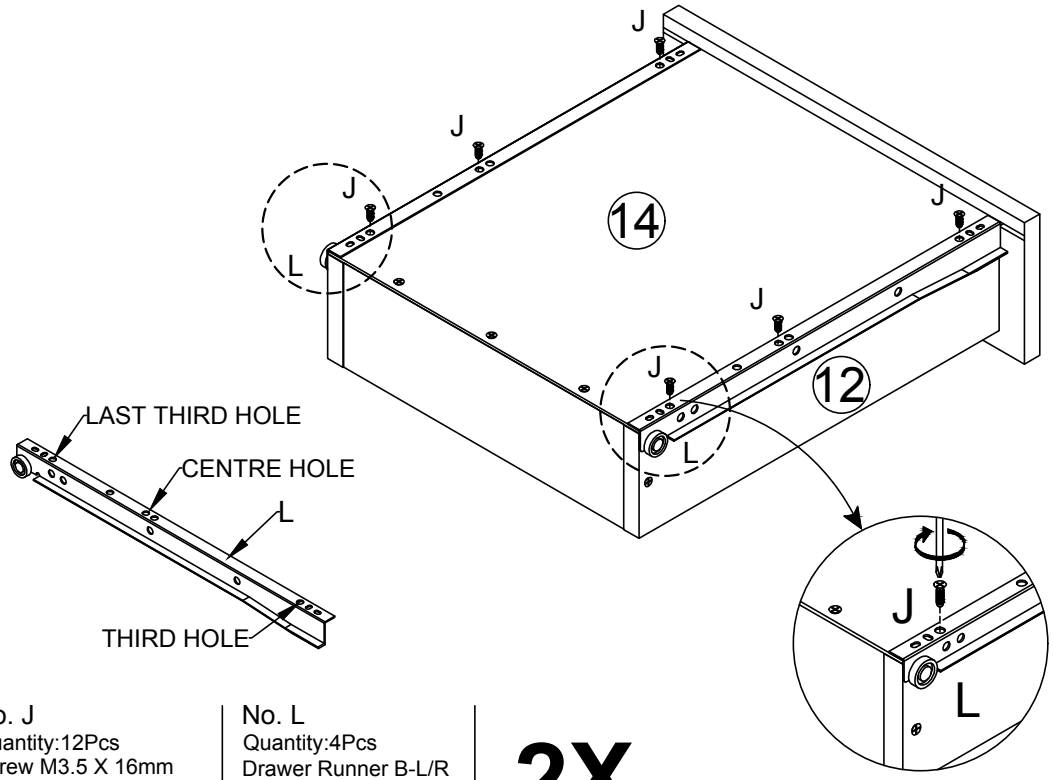

No. J
Quantity:12Pcs
Screw M3.5 X 16mm

No. L
Quantity:4Pcs
Drawer Runner B-L/R

2X

STEP 22

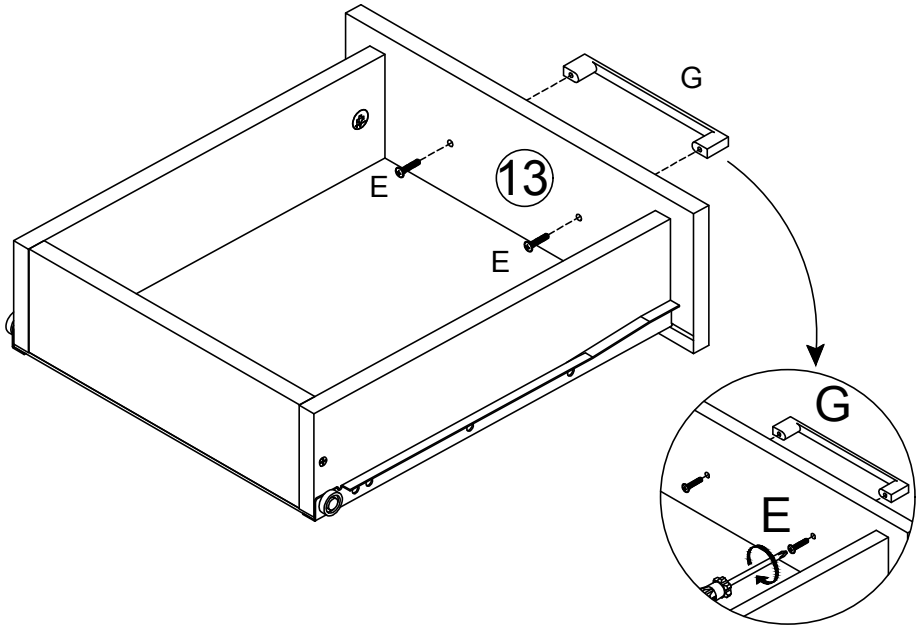

No. E
Quantity:4Pcs
Screw M4 X 25mm

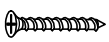

No. G
Quantity:2Pcs
Handle

2X

STEP 23

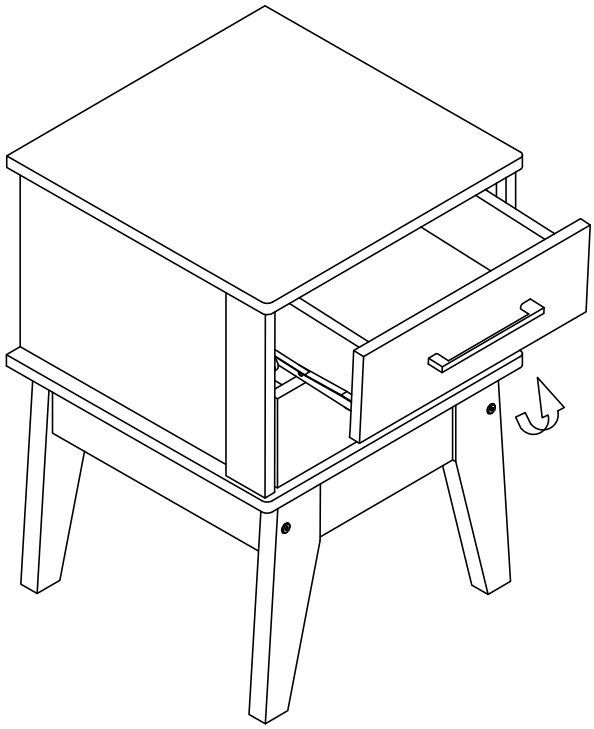

STEP 24

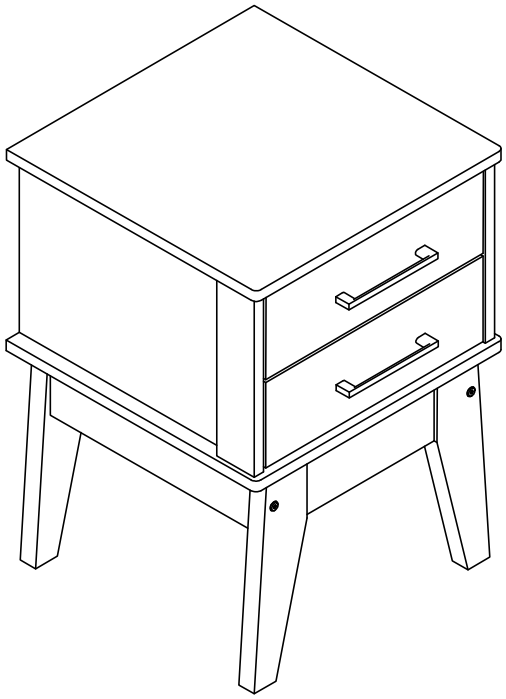

lifely.com.au

Great job. You're done!

Don't forget to share how it looks in
your space and tag us on Instagram.
@lifelyhome #homewithlifely!